Cyclone 10 LP RefKit

User Guide

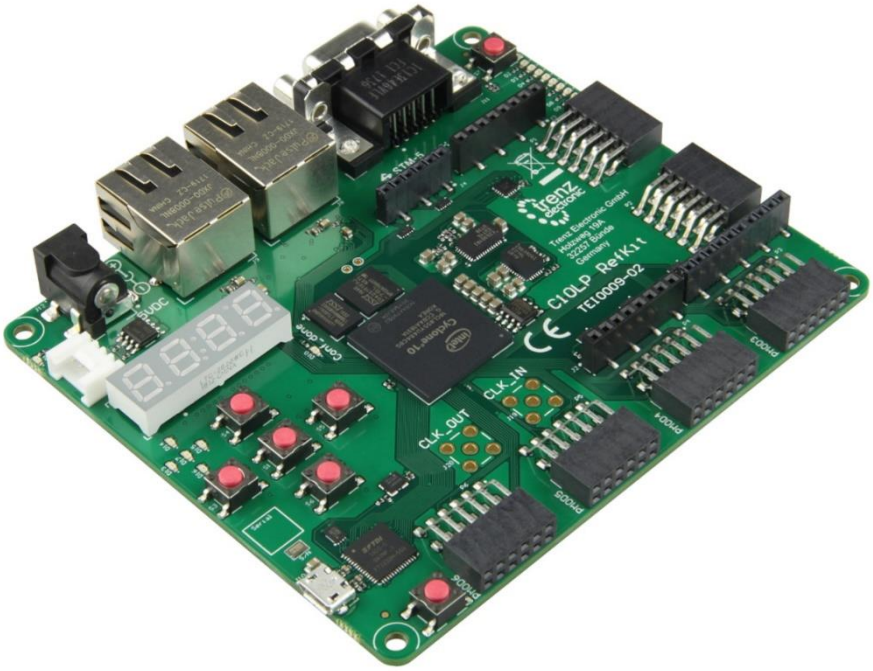

Please read the legal disclaimer at the end of this document.

Revision 1.0

Table of Contents

Table of Figures **4**

Chapter 1 - Cyclone 10 LP RefKit Development Board **5**

1.1 About Arrow Cyclone 10 LP RefKit Board 5

1.2 Useful Links 5

1.3 Getting Help 6

Chapter 2 - Introduction to the Cyclone 10 LP RefKit Board **7**

2.1 Layout and Components 7

2.2 Hardware variations 9

2.3 Block Diagram 10

Chapter 3 - Connections and Peripherals of the Cyclone 10 LP RefKit Board **11**

3.1 Board Status Elements 11

3.2 Clock Circuitry 11

3.3 Peripherals Connected to the FPGA 12

3.3.1 Communication and Configuration 12

3.3.2 Fast Ethernet 14

3.3.3 Serial Configuration Flash Memory 15

3.3.4 HyperRAM 16

3.3.5 SDRAM Memory 17

3.3.6 QSPI Flash Memory 18

3.3.7 EEPROMs 18

3.3.8 ADC/DAC 19

3.3.9 I2C Grove Connector 20

3.3.10 Arduino Header 21

3.3.11 PMOD Connectors 22

3.3.12 VGA 24

3.3.13 LEDs 25

3.3.14 Push Buttons 26

3.3.15 7-segment LED Display 27

3.3.16 Power Tree 28

Chapter 4 - Software and Driver Installation **30**

4.1 Installing Quartus Prime Software 30

4.2 Installing Arrow USB Programmer2 31

4.3 License 33

Chapter 5 - New Project with Cyclone 10 LP RefKit 34
5.1 Creating a new Blinky Project with Cyclone 10 LP RefKit 34
5.2 Building a Blinky Project with Cyclone 10 LP RefKit 39
5.2.1 Block Diagram 39
5.2.2 Components of the Design 39
5.2.3 Catalog IP 40
5.2.4 Create and Configure PLL 40
5.2.5 Create and Configure the Counter 44
5.2.6 Create and Configure the Multiplexer 46
5.2.7 Adding the Components to the Schematic 48
5.2.8 Connecting the Components 50
5.2.9 Add inputs, outputs to the schematic 53
5.2.10 Analysis and Synthesis 55
5.2.11 Adding Timing Constraints 56
5.2.12 Pinning Assignments 57
5.2.13 Compiling the Design 60
5.2.14 Reading the Compilation Report 61
Chapter 6 - Configuring the Cyclone 10 LP RefKit 63
6.1 Configure the FPGA in JTAG mode 63
6.2 Serial configuration flash memory programming 66
6.2.1 Programming File generation 67
6.2.2 Device Programming 70
6.3 Testing the Design 71
Chapter 7 - Common Issues and Fixes 72
Chapter 8 - Appendix 73
8.1 Revision History 73
8.2 Legal Disclaimer 74

Table of Figures

Figure 1 – Cyclone 10 LP RefKit Board (top view) 7
Figure 2 – Cyclone 10 LP RefKit Board (bottom view) 8
Figure 3 - Cyclone 10 LP RefKit Block Diagram 10
Figure 4 – Position of Indication LEDs 11
Figure 5 – Cyclone 10 LP RefKit Clock Tree 12
Figure 6 – JTAG Connections 13
Figure 7 – FTDI Connections 13
Figure 8 – MAC-to-PHY connection 14
Figure 9 – Configuration Flash Connections 16
Figure 10 – HyperRAM Connections 16
Figure 11 – SDRAM Connections 17
Figure 12 – QSPI Flash Connections 18
Figure 13 – EEPROM Connections 19
Figure 14 – ADC/DAC Connections 19
Figure 15 – I2C Grove Connector 20
Figure 16 - Arduino Header Connections 21
Figure 17 – PMOD Headers Connections 22
Figure 18 – VGA Connections 24
Figure 19 – LED Connections 25
Figure 20 – Button Connections 26
Figure 21 – 4-digit 7-segment Display Connections 27
Figure 22 – Quadruple Seven-segment LED Display's Internal Circuit Diagram 28
Figure 23 – Power Tree Connections 29

Chapter 1 - Cyclone 10 LP RefKit Development Board

1.1 About Arrow Cyclone 10 LP RefKit Board

The Cyclone 10 LP Reference Kit is a customizable development board that targets all kinds of applications with a wide range of interfaces. The board is based on Cyclone 10 LP FPGA, which is optimized for low-cost and low-power designs, making them ideal for high-volume and cost-sensitive applications. High-density sea of programmable gates and onboard resources allow implementation of Nios II 32-bit microcontroller IP, which provides the ideal solution for I/O expansion, chip-to-chip interfacing, industrial, automotive, and consumer applications.

The C10LP RefKit is equipped with an Arrow USB Programmer2, 2 ports 10/100Mbps Ethernet, SDRAM, HyperRAM, flash memory, VGA, 8-channel ADC/DAC, PMODs, and ARDUINO connectors making it a fully featured plug and play solution without any additional costs.

The C10LP RefKit board contains all the tools needed to use the board in conjunction with a computer that runs a 64-bit Linux / Microsoft Windows 10 operating system or later.

1.2 Useful Links

A set of useful links that can be used to get relevant information about the Cyclone 10 LP RefKit or the Cyclone 10 LP FPGA.

- Cyclone 10 LP RefKit at Arrow Shop
- Cyclone 10 LP RefKit at Trenz Electronic Shop
- Intel Cyclone 10 LP Webpage
- Cyclone 10 LP RefKit Wiki Page

1.3 Getting Help

Here are the addresses where you can get help if you encounter any problems:

- **Arrow Electronics**

  In Person
  Arrow EMEA
  + 49 (0) 6102 5030 0

  Online
  https://arrow.com

- **Trenz Electronic GmbH**

  https://www.trenz-electronic.de/en/

Chapter 2 - Introduction to the Cyclone 10 LP RefKit Board

2.1 Layout and Components

Figure 1 and Figure 2 shows a top view and the bottom view of the board. It depicts the layout of the board and indicates the location of the various connectors and key components.

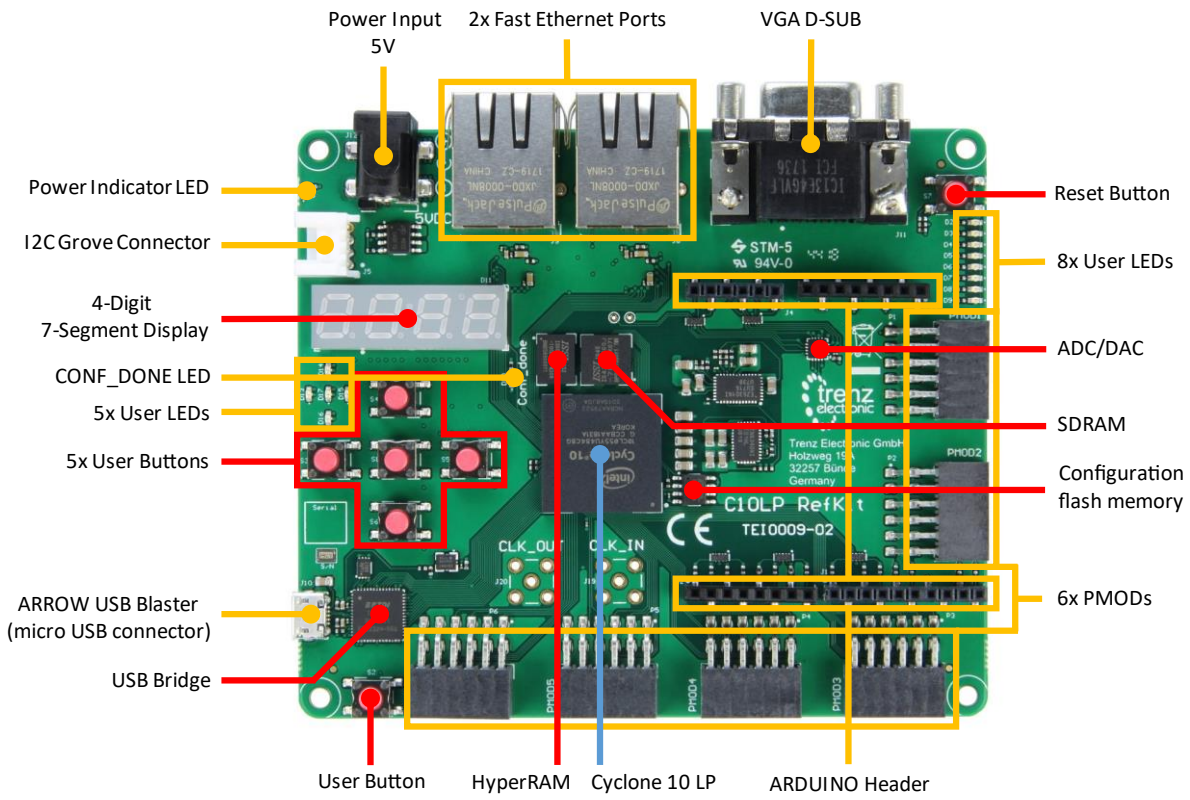

Figure 1 – Cyclone 10 LP RefKit Board (top view)

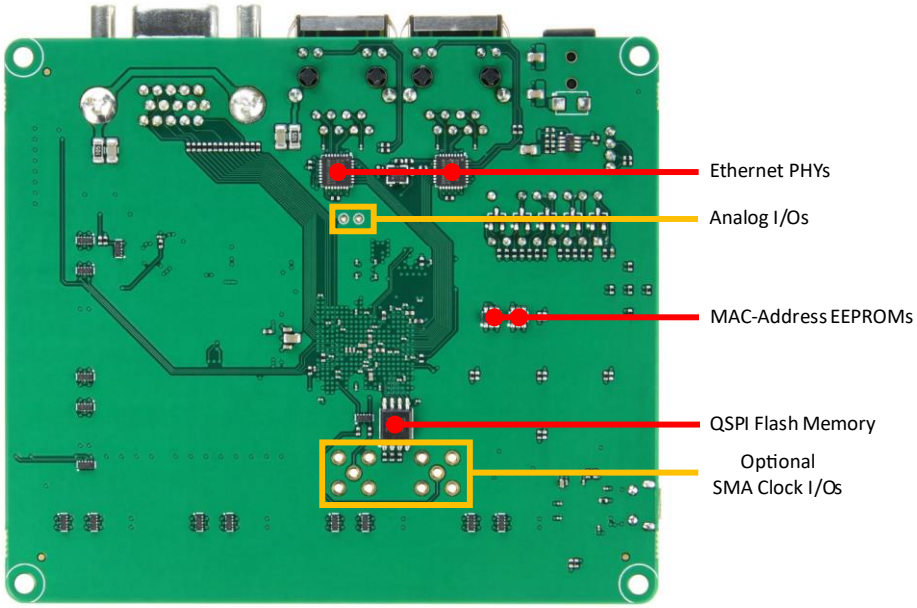

Figure 2 – Cyclone 10 LP RefKit Board (bottom view)

The following features are available on the Cyclone 10 LP RefKit board:

FPGA Device

- Intel Cyclone 10 LP 10CL055YU484C8G device.
  Features of the FPGA on the C10LP RefKit:

Resources	Device
	10CL055
Logic Elements (LE)	55,856
M9K Memory (Kb)	2,340
18 x 18 Multiplier	156
PLLs	4
I/O	321

Memory Devices

- 64-256Mbit external SDRAM memory[1]
- 64Mbit external HyperRAM memory
- 64-128Mbit external QSPI Flash memory[1]
- 16Mbit EPCQ serial configuration flash memory
- 2× 2Kbit serial MAC-Address EEPROM memory

[1] The different board variations are equipped with different memory devices

Configuration and Debug

- On-board Arrow USB Programmer2 (micro-USB type B connector) – JTAG mode

Interfaces

- 2× 10/100Mbps Ethernet PHYs with RJ45 connectors
- 8-Channel, 12-bits configurable ADC/DAC

Connectors

- 6× PMOD Headers
- Arduino Uno R3 compatible Header
- VGA with 15-pin high density D-Sub connector
- I2C Grove connector
- Optional SMA connectors for preferred frequency

Buttons and Indicators

- 4-Digit 7-Segment LED Display
- 7× Buttons
- 13× user LEDs
- 2× board status LEDs

Power

- Recommended external supply voltage range: +5.0 V (nominal)
- Recommended external supply current: 3 A
- Recommended I/O signal voltage range: 0 to +3.3 V

2.2 Hardware variations

Multiple board configurations are available with Cyclone 10 LP RefKit have different equipment. This user guide covers REV02 hardware revision with 8C and 8CA featured boards.

These two boards are the same with the exception that different memory devices have been mounted.

Ordering Code	SDRAM	SDRAM feature	QSPI Flash	QSPI Flash feature
TEI0009-02-055-8C	IS42S16400J-7BL	64Mbit up to 143MHz	IS25LP064A-JBLE	64Mbit up to 133MHz
TEI0009-02-055-8CA	IS42S16160J-7BL	256Mbit up to 143MHz	IS25LP128F-JBLE	128Mbit up to 166MHz

2.3 Block Diagram

Figure 3 represents the block diagram of the board. All the connections are established through the Cyclone 10 LP FPGA device to provide maximum flexibility for users. Users can configure the FPGA to implement any system design.

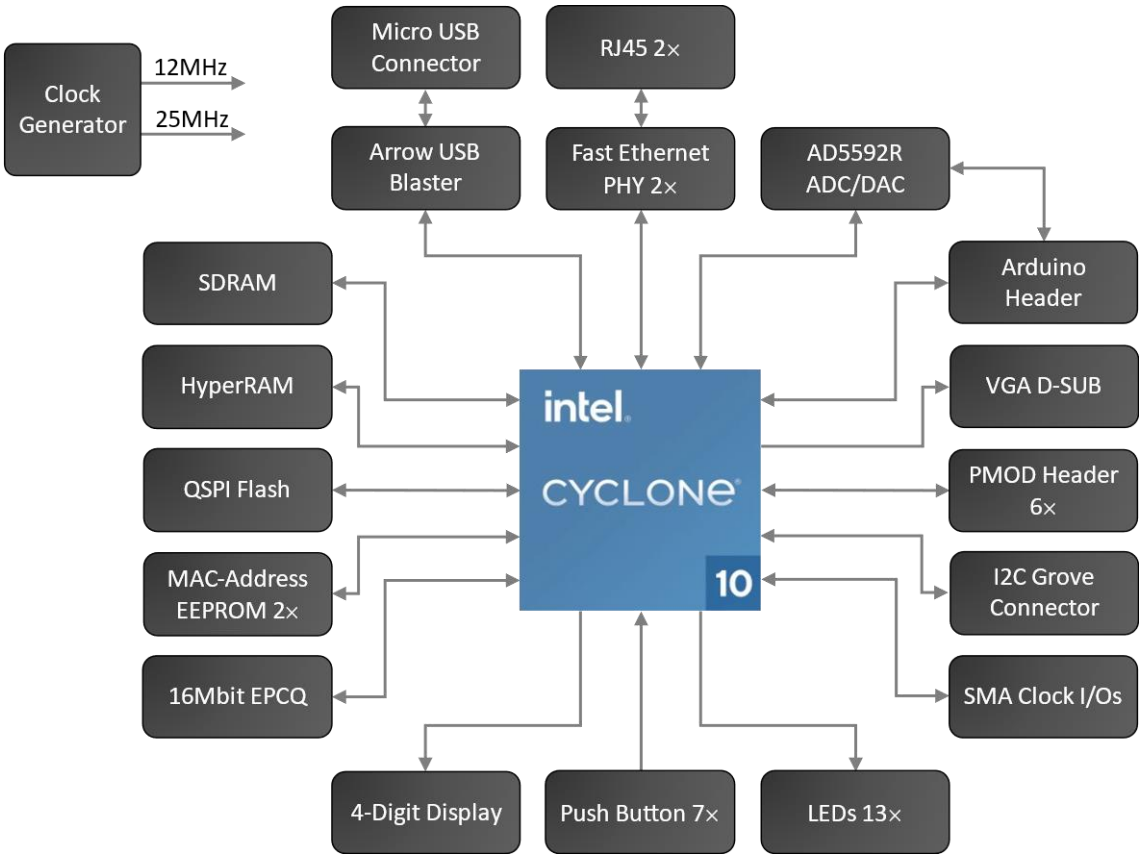

Figure 3 - Cyclone 10 LP RefKit Block Diagram

Chapter 3 - Connections and Peripherals of the Cyclone 10 LP RefKit Board

3.1 Board Status Elements

In addition to the 13 user LEDs that the FPGA can control, there are 2 additional board-specific status LEDs that can indicate the status of the board.

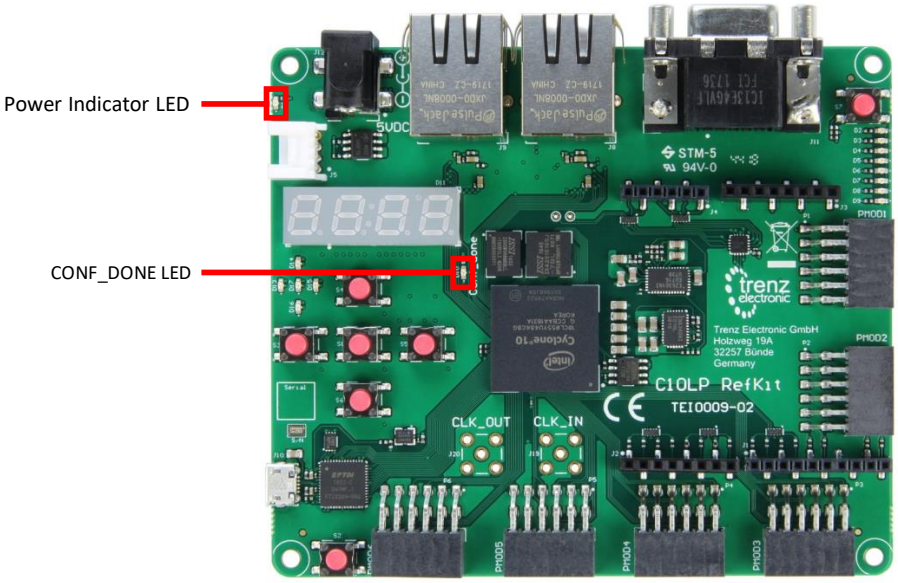

Figure 4 – Position of Indication LEDs

Board Reference	LED Name	Description
D1	3.3V	On when 3.3V power is active
D10	CONF_DONE	On when configuration data was loaded to Cyclone 10 LP device without error

3.2 Clock Circuitry

All the external clocks of the system can be seen in Figure 5. There are two default clocks which are 12MHz and 25MHz. Both clock signals are connected and driving the FPGA's user logic and other interfaces (Arrow USB Programmer2 and Ethernet). There are optional slots for other clocks that you can either add another preferred clock source to the FPGA (CLK_IN_SMA) or generate an FPGA-controlled clock (CLK_OUT_SMA). All clock signals are connected to the internal PLLs of the FPGA.

For more information on clocks and PLLs of the Cyclone 10 LP, please refer to this document.

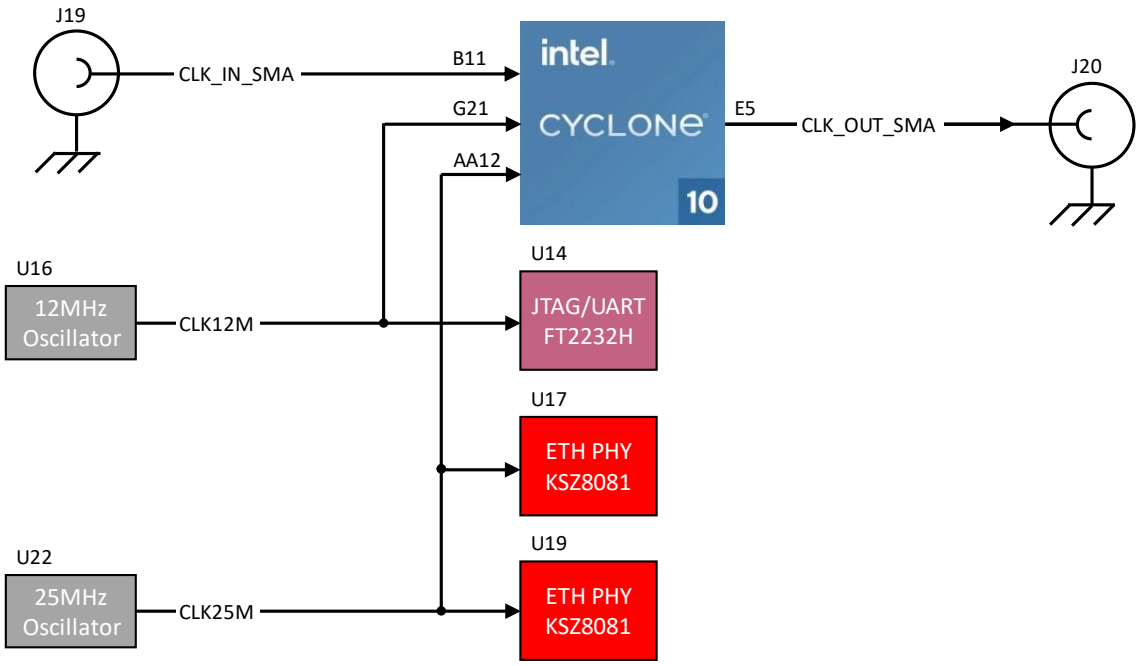

Figure 5 – Cyclone 10 LP RefKit Clock Tree

Board Reference	FPGA Pin No.	Pin Func.	Description	I/O Std
CLK12M	PIN_G21	Input	12MHz clock input	3.3 V
CLK_25M	PIN_AA12	Input	25MHz clock input	3.3 V
CLK_IN_SMA	PIN_B11	Input	Optional clock input	3.3 V
CLK_OUT_SMA	PIN_E5	Output	Optional clock output	3.3 V

3.3 Peripherals Connected to the FPGA

3.3.1 Communication and Configuration

The C10LP RefKit board uses a single chip to perform configuration of the device and communication over USB.

3.3.1.1 JTAG Chain Configuration

There are two types of configuration methods supported by C10LP RefKit:

1. **JTAG Configuration:** configuration using JTAG ports. JTAG configuration scheme allows you to directly configure the device core through JTAG pins (TDI, TDO, TMS and TCK pins). The Quartus Prime software automatically generates a .sof that can be downloaded to the Cyclone 10 LP with a download cable through the Quartus Prime Programmer.

2. **Configuration from EPCQ-A flash:** configuration using external flash. Before configuration, you need to program the configuration data .jic into the configuration flash memory (EPCQ-A) which provides non-volatile storage for the bit stream. The information is retained within

EPCQ-A even if the C10LP RefKit is turned off. When the board is powered on, the configuration data in the EPCQ-A is automatically loaded into the Cyclone 10 LP FPGA.

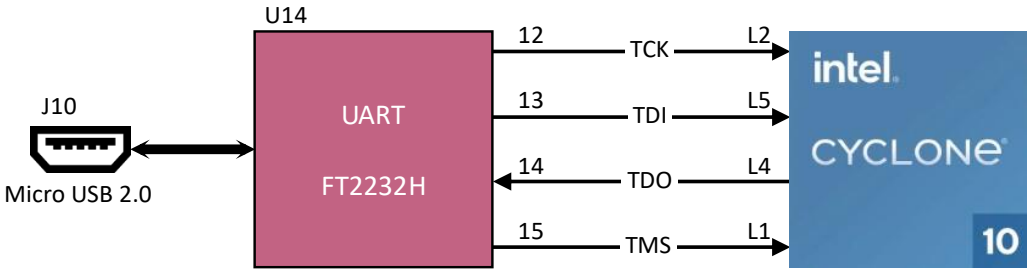

Figure 6 – JTAG Connections

Board Reference	FPGA Pin No.	Pin Func.	Description	I/O Std
TCK	PIN_L2	Input	Test Interface Clock	3.3 V
TDO	PIN_L4	Output	Test Data Out	3.3 V
TDI	PIN_L5	Input	Test Data In	3.3 V
TMS	PIN_L1	Input	Test Mode Select	3.3 V

For detailed information about how to configure the Cyclone 10 LP, please refer to Chapter 6.

3.3.1.2 USB Communication

The FTDI chip converts signals from USB 2.0 to a variety of standard serial and parallel interfaces. Channel A of FTDI chip is used in MPPSE mode for JTAG. Channel B is routed to FPGA and is usable for other standard interfaces.

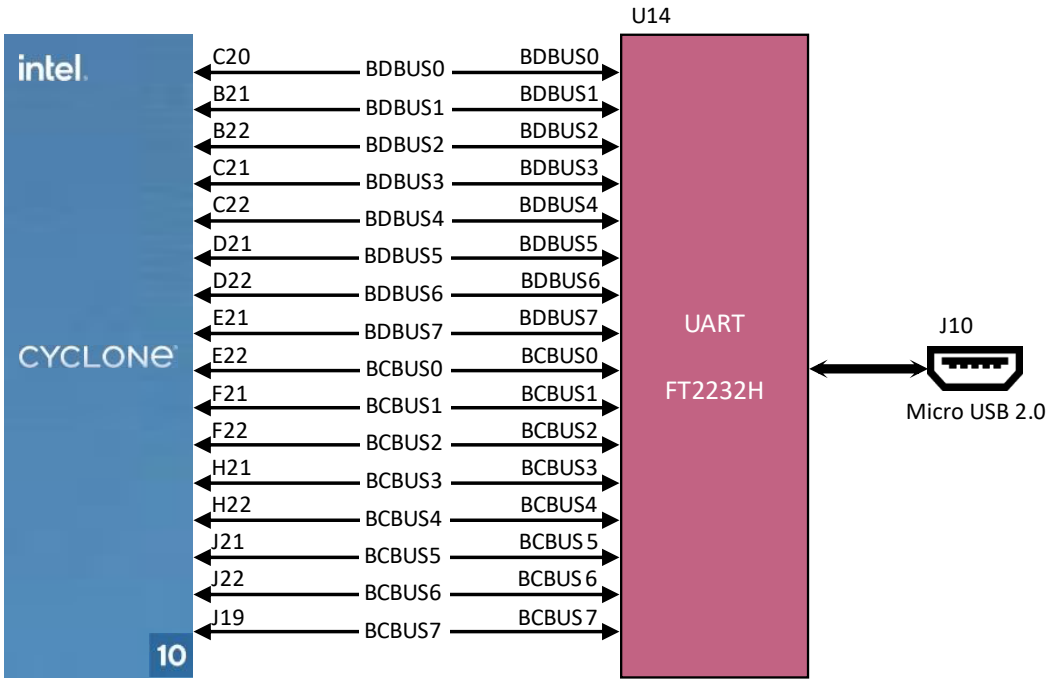

Figure 7 – FTDI Connections

Board Reference	FPGA Pin No.	Pin Func.	Description	I/O Std
BDBUS0	PIN_C20	Bidir	D[0] of bidirectional data bus	3.3 V
BDBUS1	PIN_B21	Bidir	D[1] of bidirectional data bus	3.3 V
BDBUS2	PIN_B22	Bidir	D[2] of bidirectional data bus	3.3 V
BDBUS3	PIN_C21	Bidir	D[3] of bidirectional data bus	3.3 V
BDBUS4	PIN_C22	Bidir	D[4] of bidirectional data bus	3.3 V
BDBUS5	PIN_D21	Bidir	D[5] of bidirectional data bus	3.3 V
BDBUS6	PIN_D22	Bidir	D[6] of bidirectional data bus	3.3 V
BDBUS7	PIN_E21	Bidir	D[7] of bidirectional data bus	3.3 V
BCBUS0	PIN_E22	Bidir	D[0] of bidirectional data bus	3.3 V
BCBUS1	PIN_F21	Bidir	D[1] of bidirectional data bus	3.3 V
BCBUS2	PIN_F22	Bidir	D[2] of bidirectional data bus	3.3 V
BCBUS3	PIN_H21	Bidir	D[3] of bidirectional data bus	3.3 V
BCBUS4	PIN_H22	Bidir	D[4] of bidirectional data bus	3.3 V
BCBUS5	PIN_J21	Bidir	D[5] of bidirectional data bus	3.3 V
BCBUS6	PIN_J21	Bidir	D[6] of bidirectional data bus	3.3 V
BCBUS7	PIN_J19	Bidir	D[7] of bidirectional data bus	3.3 V

3.3.2 Fast Ethernet

The board has two independent 10/100Mbps Ethernet ports with RJ-45 connectors. For the physical layer, the Microchip KSZ8081 Ethernet PHY is used, which is suitable for general applications.

The MAC-to-PHY interface is configured to a MII interface connections with MDIO interface as management.

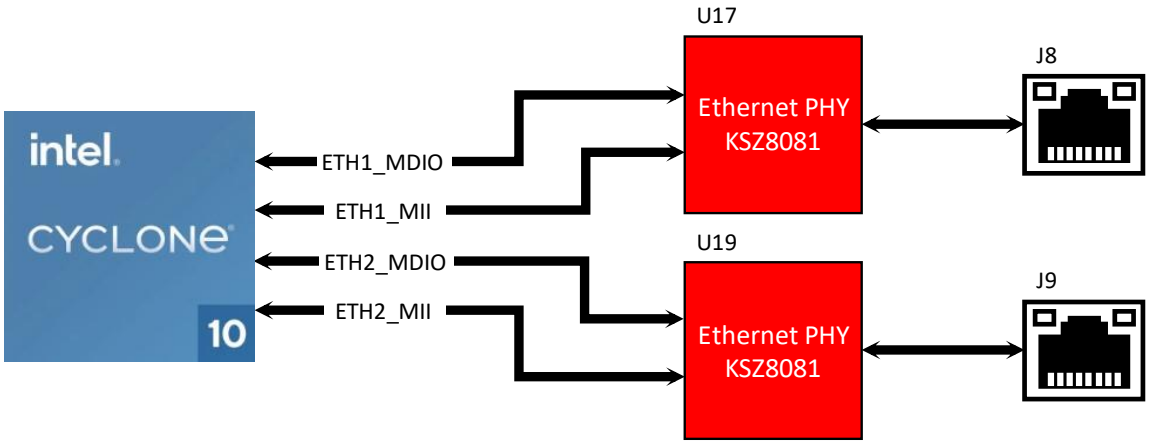

Figure 8 – MAC-to-PHY connection

Board Reference	FPGA Pin No.	Pin Func.	Description	I/O Std
ETH1_MDIO	PIN_AA21	Bidir	Management Interface Data	3.3 V
ETH1_MDC	PIN_AA22	Output	Management Interface Clock	3.3 V
ETH1_COL	PIN_T19	Bidir	MII Collision Detect	3.3 V
ETH1_CRS	PIN_R20	Bidir	MII Carrier Sense	3.3 V

Board Reference	FPGA Pin No.	Pin Func.	Description	I/O Std
ETH1_RXDV	PIN_W21	Bidir	MII Receive Data Valid	3.3 V
ETH1_RST	PIN_R19	Output	Chip Reset	3.3 V
ETH1_INTRP	PIN_U22	Bidir	Interrupt	3.3 V
ETH1_RXC	PIN_V22	Bidir	MII Receive Clock	3.3 V
ETH1_RXER	PIN_V21	Bidir	MII Receive Error	3.3 V
ETH1_RXD0	PIN_W22	Bidir	MII Receive Data D[0]	3.3 V
ETH1_RXD1	PIN_W20	Bidir	MII Receive Data D[1]	3.3 V
ETH1_RXD2	PIN_Y21	Bidir	MII Receive Data D[2]	3.3 V
ETH1_RXD3	PIN_Y22	Bidir	MII Receive Data D[3]	3.3 V
ETH1_TXC	PIN_U21	Bidir	MII Transmit Clock	3.3 V
ETH1_TXEN	PIN_T18	Output	MII Transmit Enable	3.3 V
ETH1_TXD0	PIN_T17	Output	MII Transmit Data D[0]	3.3 V
ETH1_TXD1	PIN_U20	Output	MII Transmit Data D[1]	3.3 V
ETH1_TXD2	PIN_U19	Output	MII Transmit Data D[2]	3.3 V
ETH1_TXD3	PIN_T20	Output	MII Transmit Data D[3]	3.3 V
ETH2_MDIO	PIN_N20	Bidir	Management Interface Data	3.3 V
ETH2_MDC	PIN_N18	Output	Management Interface Clock	3.3 V
ETH2_COL	PIN_P21	Bidir	MII Collision Detect	3.3 V
ETH2_CRS	PIN_P22	Bidir	MII Carrier Sense	3.3 V
ETH2_RXDV	PIN_R18	Bidir	MII Receive Data Valid	3.3 V
ETH2_RST	PIN_M21	Output	Chip Reset	3.3 V
ETH2_INTRP	PIN_N17	Bidir	Interrupt	3.3 V
ETH2_RXC	PIN_R17	Bidir	MII Receive Clock	3.3 V
ETH2_RXER	PIN_P17	Bidir	MII Receive Error	3.3 V
ETH2_RXD0	PIN_M20	Bidir	MII Receive Data D[0]	3.3 V
ETH2_RXD1	PIN_M19	Bidir	MII Receive Data D[1]	3.3 V
ETH2_RXD2	PIN_M16	Bidir	MII Receive Data D[2]	3.3 V
ETH2_RXD3	PIN_N19	Bidir	MII Receive Data D[3]	3.3 V
ETH2_TXC	PIN_N16	Bidir	MII Transmit Clock	3.3 V
ETH2_TXEN	PIN_R22	Output	MII Transmit Enable	3.3 V
ETH2_TXD0	PIN_R21	Output	MII Transmit Data D[0]	3.3 V
ETH2_TXD1	PIN_N21	Output	MII Transmit Data D[1]	3.3 V
ETH2_TXD2	PIN_M22	Output	MII Transmit Data D[2]	3.3 V
ETH2_TXD3	PIN_N22	Output	MII Transmit Data D[3]	3.3 V

3.3.3 Serial Configuration Flash Memory

The C10LP RefKit board is integrated with a 16MBit of serial flash memory that can be used for user data and programming non-volatile storage. The configuration bitstream is downloaded into the serial configuration device which automatically loads the configuration data into the Cyclone 10 LP when the board is powered on. Device memory capacity not consumed storing configuration data can be used as general-purpose non-volatile memory, which is perfect for program and data storage. Several interfaces available with Nios II embedded processors allow you to access the serial configuration device as a memory module connected to your embedded system.

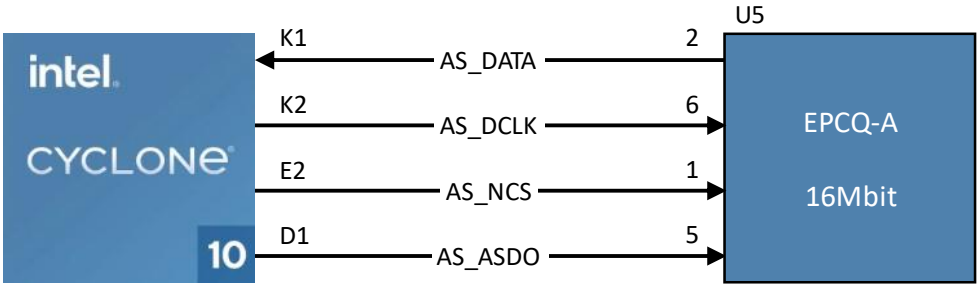

Figure 9 – Configuration Flash Connections

Board Reference	FPGA Pin No.	Pin Func.	Description	I/O Std
AS_DATA	PIN_K1	Input	Data In	3.3 V
AS_DCLK	PIN_K2	Output	Clock	3.3 V
AS_NCS	PIN_E2	Output	Chip Select	3.3 V
AS_ASDO	PIN_D1	Output	Data Out	3.3 V

3.3.4 HyperRAM

A 64Mbit Pseudo Static Random Access Memory using a self-refresh DRAM array is integrated on C10LP RefKit. The Cyclone 10 LP connects to this memory via a very low signal count interface, called HyperBus.

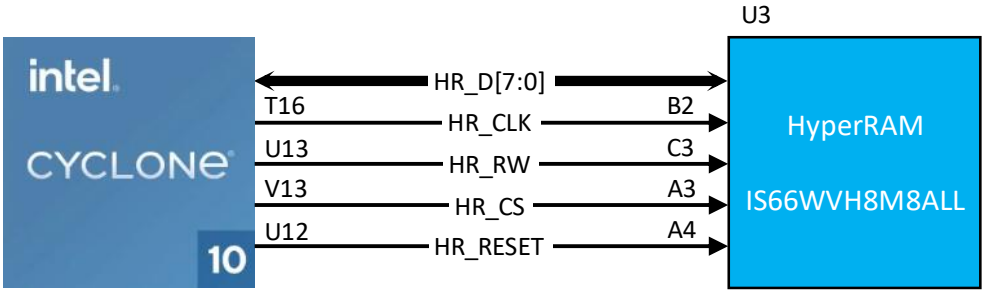

Figure 10 – HyperRAM Connections

Board Reference	FPGA Pin No.	Pin Func.	Description	I/O Std
HR_CLK	PIN_T16	Output	Single Ended Clock	3.3 V
HR_RW	PIN_U13	Bidir	Read Write Data Strobe	3.3 V
HR_CS	PIN_V13	Output	Chip Select	3.3 V
HR_RESET	PIN_U12	Output	Hardware Reset	3.3 V
HR_D0	PIN_T15	Bidir	Data [0]	3.3 V
HR_D1	PIN_W17	Bidir	Data [1]	3.3 V
HR_D2	PIN_U14	Bidir	Data [2]	3.3 V
HR_D3	PIN_R15	Bidir	Data [3]	3.3 V
HR_D4	PIN_R14	Bidir	Data [4]	3.3 V
HR_D5	PIN_V16	Bidir	Data [5]	3.3 V
HR_D6	PIN_U16	Bidir	Data [6]	3.3 V
HR_D7	PIN_U17	Bidir	Data [7]	3.3 V

3.3.5 SDRAM Memory

The C10LP RefKit board supports single-chip SDRAM with up to 256Mbit density[2] which can operate up to 143 MHz clock frequency. Below are the connections and pinning of the SDRAM used in the C10LP RefKit.

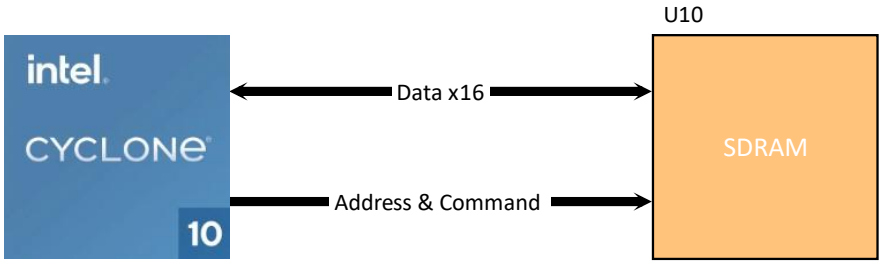

Figure 11 – SDRAM Connections

Board Reference	FPGA Pin No.	Pin Func.	Description	I/O Std
A0	PIN_V5	Output	SDRAM Address [0]	3.3 V
A1	PIN_Y3	Output	SDRAM Address [1]	3.3 V
A2	PIN_W6	Output	SDRAM Address [2]	3.3 V
A3	PIN_Y4	Output	SDRAM Address [3]	3.3 V
A4	PIN_AB5	Output	SDRAM Address [4]	3.3 V
A5	PIN_AB6	Output	SDRAM Address [5]	3.3 V
A6	PIN_AA6	Output	SDRAM Address [6]	3.3 V
A7	PIN_AA7	Output	SDRAM Address [7]	3.3 V
A8	PIN_AB8	Output	SDRAM Address [8]	3.3 V
A9	PIN_AA5	Output	SDRAM Address [9]	3.3 V
A10	PIN_V6	Output	SDRAM Address [10]	3.3 V
A11	PIN_AA8	Output	SDRAM Address [11]	3.3 V
A12	PIN_AB8	Output	SDRAM Address [12]	3.3 V
A13	PIN_AB9	Output	SDRAM Address [13]	3.3 V
BA0	PIN_Y6	Output	SDRAM Bank Address [0]	3.3 V
BA1	PIN_V7	Output	SDRAM Bank Address [1]	3.3 V
RAS	PIN_V8	Output	SDRAM Row Address Strobe	3.3 V
CAS	PIN_Y7	Output	SDRAM Column Address Strobe	3.3 V
WE	PIN_W8	Output	SDRAM Write Enable	3.3 V
CS	PIN_W7	Output	SDRAM Chip Select	3.3 V
CLK	PIN_AA3	Output	SDRAM Input Clock	3.3 V
CKE	PIN_AA4	Output	SDRAM Clock Enable	3.3 V
DQ0	PIN_AB16	Bidir	SDRAM Data [0]	3.3 V
DQ1	PIN_Y17	Bidir	SDRAM Data [1]	3.3 V
DQ2	PIN_AA16	Bidir	SDRAM Data [2]	3.3 V
DQ3	PIN_AA19	Bidir	SDRAM Data [3]	3.3 V
DQ4	PIN_AB18	Bidir	SDRAM Data [4]	3.3 V
DQ5	PIN_AA20	Bidir	SDRAM Data [5]	3.3 V
DQ6	PIN_AB19	Bidir	SDRAM Data [6]	3.3 V
DQ7	PIN_AB20	Bidir	SDRAM Data [7]	3.3 V

[2] The size of the mounted SDRAM depends on the board variation. For detailed information, please refer to Chapter 2.2.

Board Reference	FPGA Pin No.	Pin Func.	Description	I/O Std
DQ8	PIN_Y13	Bidir	SDRAM Data [8]	3.3 V
DQ9	PIN_Y15	Bidir	SDRAM Data [9]	3.3 V
DQ10	PIN_AA13	Bidir	SDRAM Data [10]	3.3 V
DQ11	PIN_AB15	Bidir	SDRAM Data [11]	3.3 V
DQ12	PIN_AB13	Bidir	SDRAM Data [12]	3.3 V
DQ13	PIN_AA15	Bidir	SDRAM Data [13]	3.3 V
DQ14	PIN_AA14	Bidir	SDRAM Data [14]	3.3 V
DQ15	PIN_AB14	Bidir	SDRAM Data [15]	3.3 V
DQM0	PIN_Y14	Output	SDRAM Lower Data Mask	3.3 V
DQM1	PIN_W13	Output	SDRAM Upper Data Mask	3.3 V

3.3.6 QSPI Flash Memory

There is a non-volatile, QSPI Flash memory with up to 128Mbit density[3] which can operate on up to 166MHz on the board. It can be used to store larger size user data or software for Nios II embedded processors.

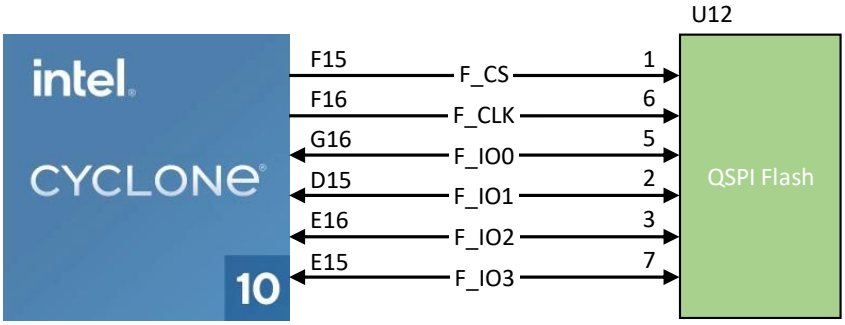

Figure 12 – QSPI Flash Connections

Board Reference	FPGA Pin No.	Pin Func.	Description	I/O Std
F_CS	PIN_F15	Output	Chip Enable	3.3 V
F_CLK	PIN_F16	Output	Serial Data Clock	3.3 V
F_IO0	PIN_G16	Bidir	Serial Data [0]	3.3 V
F_IO1	PIN_D15	Bidir	Serial Data [1]	3.3 V
F_IO2	PIN_E16	Bidir	Serial Data [2]	3.3 V
F_IO3	PIN_E15	Bidir	Serial Data [3]	3.3 V

3.3.7 EEPROMs

The C10LP RefKit board has 2 pieces 2Kb serial EEPROMs that can be used for MAC address configuration. The EEPROMs are pre-programmed with a globally unique EUI-48 node address.

[3] The size of the mounted QSPI Flash depends on the board variation. For detailed information, please refer to Chapter 2.2.

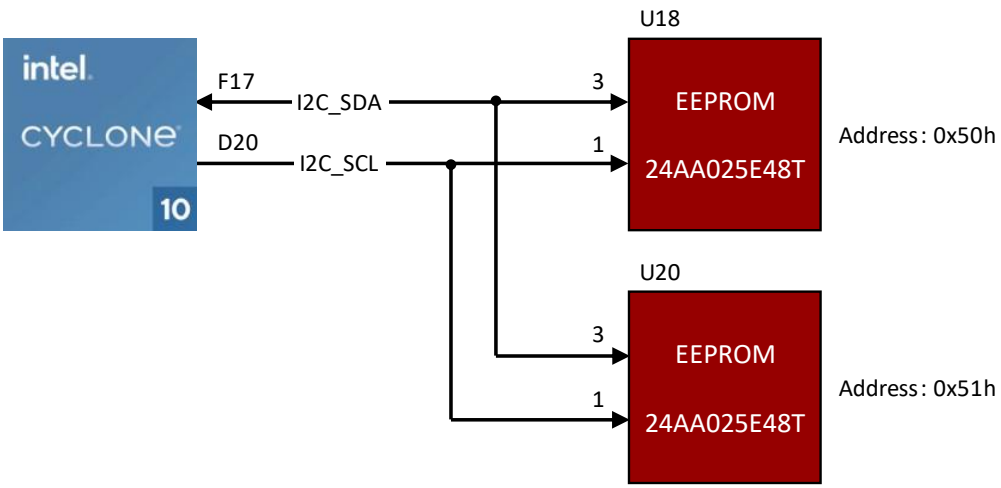

Figure 13 – EEPROM Connections

Board Reference	FPGA Pin No.	Pin Func.	Description	I/O Std
I2C_SDA	PIN_F17	Bidir	Serial Data Line	3.3 V
I2C_SCL	PIN_D20	Output	Serial Clock Line	3.3 V

3.3.8 ADC/DAC

The C10LP RefKit is equipped with an 8-channel, 12-bit, configurable analog-to-digital, digital-to-analog converter. There are 2 dedicated through-hole connection points on the board for 2 analog channels, while the remaining 6 channels are directly connected to the J4 header of the Arduino interface.

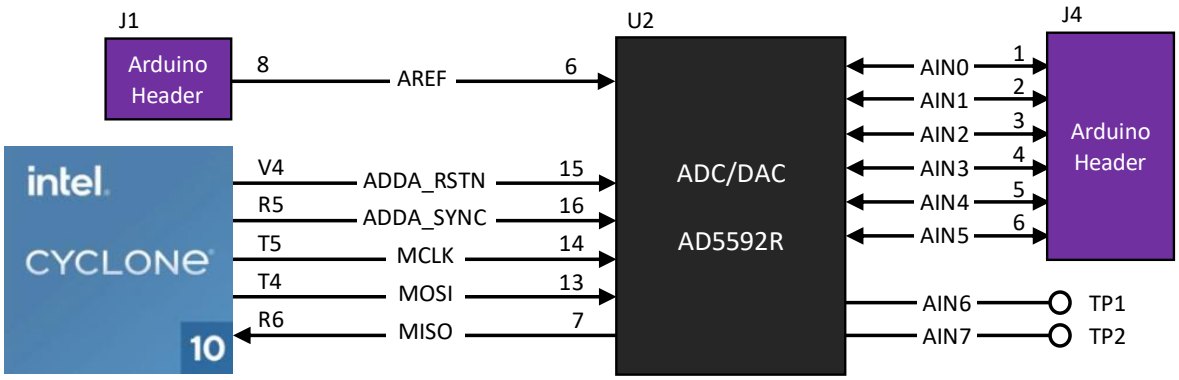

Figure 14 – ADC/DAC Connections

Board Reference	FPGA Pin No.	Pin Func.	Description	I/O Std
ADDA_RSTN	PIN_V4	Output	Reset	3.3 V
ADDA_SYNC	PIN_R5	Output	Synchronization	3.3 V
MCLK	PIN_T5	Output	Serial Clock Input	3.3 V
MOSI	PIN_T4	Output	Master Output Slave Input	3.3 V
MISO	PIN_R6	Input	Master Input Slave Output	3.3 V

Board Reference	Connector	Description
AREF	J1 / 8	External Reference Voltage
AIN0	J4 / 1	Analog I/O Channel 0
AIN1	J4 / 2	Analog I/O Channel 1
AIN2	J4 / 3	Analog I/O Channel 2
AIN3	J4 / 4	Analog I/O Channel 3
AIN4	J4 / 5	Analog I/O Channel 4
AIN5	J4 / 6	Analog I/O Channel 5
AIN6	TP1	Analog I/O Channel 6
AIN7	TP2	Analog I/O Channel 7

Note: The FPGA is also directly connected to the J4 connector. If AIN5..0 are used as analog input/output, make sure that the belonging FPGA I/Os are unused and configured as input tri-stated!

Note: Do not drive a voltage greater than 3.3V to the analog I/Os. Voltages greater than 3.3V can cause irreversible damage to the FPGA!

3.3.9 I2C Grove Connector

There is a Grove connector which allows external, I2C compatible devices to be connected to the C10LP RefKit board.

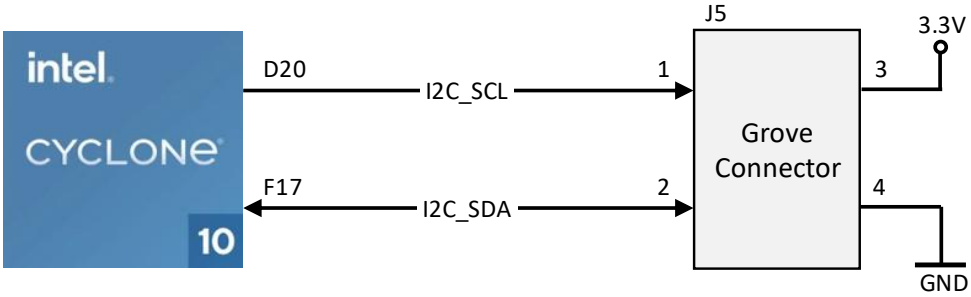

Figure 15 – I2C Grove Connector

Board Reference	FPGA Pin No.	Grove Pin	Pin Func.	Description	I/O Std
I2C_SCL	PIN_D20	1	Output	Serial Clock Line	3.3 V
I2C_SDA	PIN_F17	2	Bidir	Serial Data Line	3.3 V
3.3V	-	3	PWR	3.3V power to the connector	-
GND	-	4	PWR	Ground output to the connector	-

Note: The EEPROMs are also connected to this I2C bus, 0x50h and 0x51h addresses are reserved for these EEPROMs.

3.3.10 Arduino Header

The C10LP RefKit board offers connectivity to classic Arduino compatible shields that could also alternatively be used as GPIOs. The Arduino connectors offer up to 23 digital I/Os which comes with four independent headers.

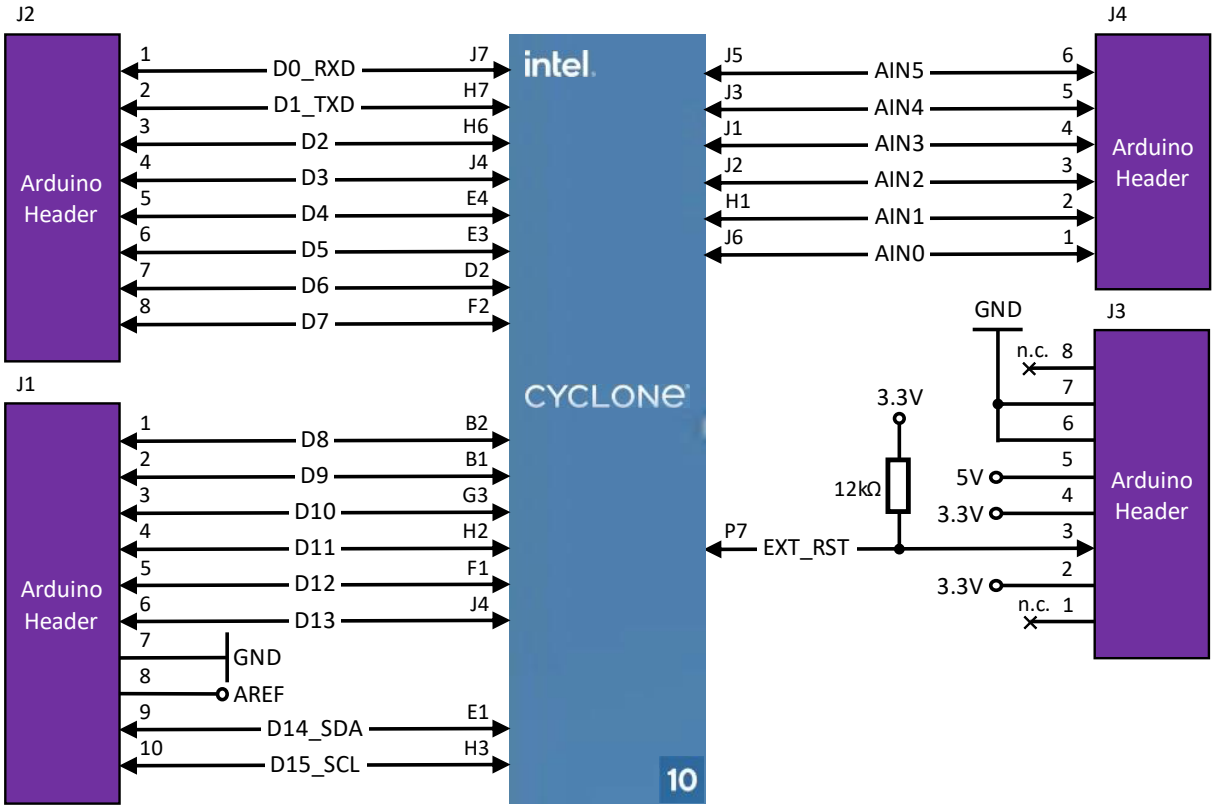

Figure 16 - Arduino Header Connections

Board Reference	FPGA Pin No.	Arduino Header	Pin Func.	Description	I/O Std
D0_RXD	PIN_J7	J2 / 1	Bidir	Digital I/O [0] or Serial In	3.3 V
D1_TXD	PIN_H7	J2 / 2	Bidir	Digital I/O [1] or Serial Out	3.3 V
D2	PIN_H6	J2 / 3	Bidir	Digital I/O [2]	3.3 V
D3	PIN_J4	J2 / 4	Bidir	Digital I/O [3]	3.3 V
D4	PIN_E4	J2 / 5	Bidir	Digital I/O [4]	3.3 V
D5	PIN_E3	J2 / 6	Bidir	Digital I/O [5]	3.3 V
D6	PIN_D2	J2 / 7	Bidir	Digital I/O [6]	3.3 V
D7	PIN_F2	J2 / 8	Bidir	Digital I/O [7]	3.3 V
D8	PIN_B2	J1 / 1	Bidir	Digital I/O [8]	3.3 V
D9	PIN_B1	J1 / 2	Bidir	Digital I/O [9]	3.3 V
D10	PIN_G3	J1 / 3	Bidir	Digital I/O [10]	3.3 V
D11	PIN_H2	J1 / 4	Bidir	Digital I/O [11]	3.3V
D12	PIN_F1	J1 / 5	Bidir	Digital I/O [12]	3.3 V
D13	PIN_J4	J1 / 6	Bidir	Digital I/O [13]	3.3 V
GND	-	J1 / 7	PWR	Ground output to the connector	-
AREF	-	J1 / 8	PWR	Input reference voltage for ADC/DAC	-

Board Reference	FPGA Pin No.	Arduino Header	Pin Func.	Description	I/O Std
D14_SDA	PIN_E1	J1 / 9	Bidir	Digital I/O [14] or Serial Data Line	3.3 V
D15_SCL	PIN_H3	J1 / 10	Bidir	Digital I/O [15] or Serial Clock Line	3.3 V
n.c.	-	J3 / 1	-	Not connected	-
3.3V	-	J3 / 2	PWR	3.3V power to the connector	-
EXT_RST	PIN_P7	J3 / 3	Bidir	Reset signal of the FPGA	3.3 V
3.3V	-	J3 / 4	PWR	3.3V power to the connector	-
5V	-	J3 / 5	PWR	5V power to the connector	-
GND	-	J3 / 6	PWR	Ground output to the connector	-
GND	-	J3 / 7	PWR	Ground output to the connector	-
n.c.	-	J3 / 8	-	Not connected	-
AIN0	PIN_J6	J4 / 1	Bidir	GPIO [0]	3.3 V
AIN1	PIN_H1	J4 / 2	Bidir	GPIO [1]	3.3 V
AIN2	PIN_J2	J4 / 3	Bidir	GPIO [2]	3.3 V
AIN3	PIN_J1	J4 / 4	Bidir	GPIO [3]	3.3 V
AIN4	PIN_J3	J4 / 5	Bidir	GPIO [4]	3.3 V
AIN5	PIN_J5	J4 / 6	Bidir	GPIO [5]	3.3 V

Note: The ADC/DAC is also directly connected to the J4 connector. If AIN5..0 are used as digital I/Os of the FPGA, make sure that the ADC/DAC does not drive these wires!

3.3.11 PMOD Connectors

The C10LP RefKit board offers connectivity to PMOD compatible connectors, making it possible to add a big variety of sensors or ICs to the system. The board has 6 PMOD connectors that can be configured to 2 × 6 pins or 1 × 12 pins

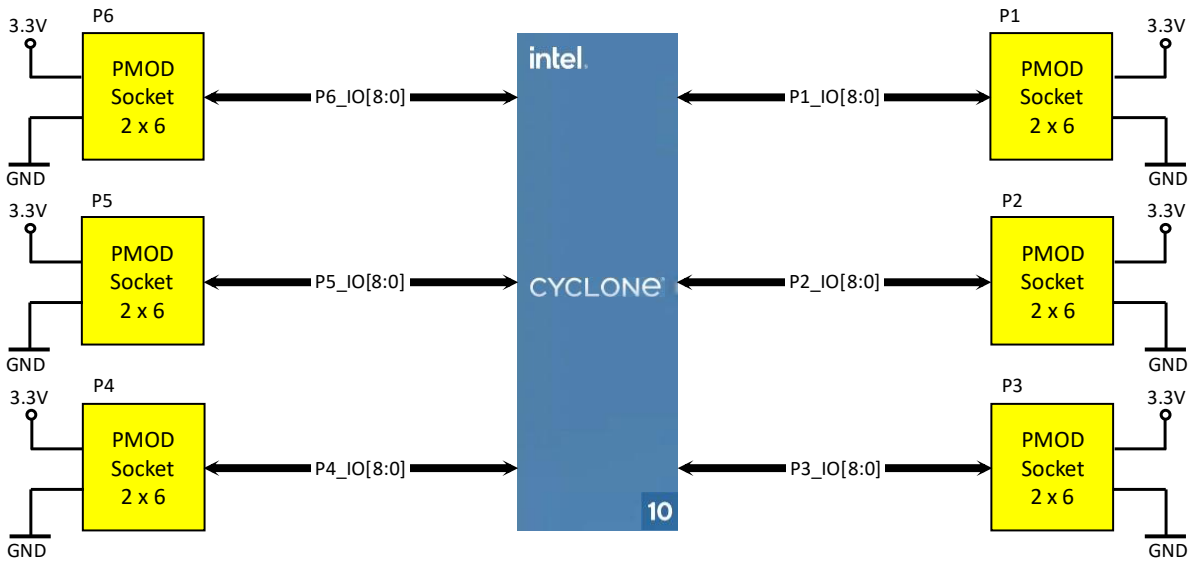

Figure 17 – PMOD Headers Connections

Board Reference	FPGA Pin No.	PMOD Header	Pin Func.	Description	I/O Std
P1_IO1	PIN_V3	P1 / 1	Bidir	PMOD I/O [1] of P1	3.3 V
P1_IO2	PIN_P6	P1 / 2	Bidir	PMOD I/O [2] of P1	3.3 V
P1_IO3	PIN_P4	P1 / 3	Bidir	PMOD I/O [3] of P1	3.3 V
P1_IO4	PIN_N5	P1 / 4	Bidir	PMOD I/O [4] of P1	3.3 V
P1_IO5	PIN_N7	P1 / 7	Bidir	PMOD I/O [5] of P1	3.3 V
P1_IO6	PIN_R4	P1 / 8	Bidir	PMOD I/O [6] of P1	3.3 V
P1_IO7	PIN_P5	P1 / 9	Bidir	PMOD I/O [7] of P1	3.3 V
P1_IO8	PIN_N7	P1 / 10	Bidir	PMOD I/O [8] of P1	3.3 V
P2_IO1	PIN_N1	P2 / 1	Bidir	PMOD I/O [1] of P2	3.3 V
P2_IO2	PIN_M2	P2 / 2	Bidir	PMOD I/O [2] of P2	3.3 V
P2_IO3	PIN_M4	P2 / 3	Bidir	PMOD I/O [3] of P2	3.3 V
P2_IO4	PIN_L6	P2 / 4	Bidir	PMOD I/O [4] of P2	3.3 V
P2_IO5	PIN_N2	P2 / 7	Bidir	PMOD I/O [5] of P2	3.3 V
P2_IO6	PIN_M1	P2 / 8	Bidir	PMOD I/O [6] of P2	3.3 V
P2_IO7	PIN_M3	P2 / 9	Bidir	PMOD I/O [7] of P2	3.3 V
P2_IO8	PIN_M6	P2 / 10	Bidir	PMOD I/O [8] of P2	3.3 V
P3_IO1	PIN_A3	P3 / 1	Bidir	PMOD I/O [1] of P3	3.3 V
P3_IO2	PIN_B3	P3 / 2	Bidir	PMOD I/O [2] of P3	3.3 V
P3_IO3	PIN_A4	P3 / 3	Bidir	PMOD I/O [3] of P3	3.3 V
P3_IO4	PIN_B4	P3 / 4	Bidir	PMOD I/O [4] of P3	3.3 V
P3_IO5	PIN_B6	P3 / 7	Bidir	PMOD I/O [5] of P3	3.3 V
P3_IO6	PIN_A6	P3 / 8	Bidir	PMOD I/O [6] of P3	3.3 V
P3_IO7	PIN_C6	P3 / 9	Bidir	PMOD I/O [7] of P3	3.3 V
P3_IO8	PIN_A5	P3 / 10	Bidir	PMOD I/O [8] of P3	3.3 V
P4_IO1	PIN_A7	P4 / 1	Bidir	PMOD I/O [1] of P4	3.3 V
P4_IO2	PIN_B7	P4 / 2	Bidir	PMOD I/O [2] of P4	3.3 V
P4_IO3	PIN_A8	P4 / 3	Bidir	PMOD I/O [3] of P4	3.3 V
P4_IO4	PIN_B8	P4 / 4	Bidir	PMOD I/O [4] of P4	3.3 V
P4_IO5	PIN_B10	P4 / 7	Bidir	PMOD I/O [5] of P4	3.3 V
P4_IO6	PIN_A10	P4 / 8	Bidir	PMOD I/O [6] of P4	3.3 V
P4_IO7	PIN_B9	P4 / 9	Bidir	PMOD I/O [7] of P4	3.3 V
P4_IO8	PIN_A9	P4 / 10	Bidir	PMOD I/O [8] of P4	3.3 V
P5_IO1	PIN_A14	P5 / 1	Bidir	PMOD I/O [1] of P5	3.3 V
P5_IO2	PIN_B15	P5 / 2	Bidir	PMOD I/O [2] of P5	3.3 V
P5_IO3	PIN_A15	P5 / 3	Bidir	PMOD I/O [3] of P5	3.3 V
P5_IO4	PIN_B16	P5 / 4	Bidir	PMOD I/O [4] of P5	3.3 V
P5_IO5	PIN_B14	P5 / 7	Bidir	PMOD I/O [5] of P5	3.3 V
P5_IO6	PIN_A13	P5 / 8	Bidir	PMOD I/O [6] of P5	3.3 V
P5_IO7	PIN_B13	P5 / 9	Bidir	PMOD I/O [7] of P5	3.3 V
P5_IO8	PIN_A16	P5 / 10	Bidir	PMOD I/O [8] of P5	3.3 V
P6_IO1	PIN_B19	P6 / 1	Bidir	PMOD I/O [1] of P6	3.3 V
P6_IO2	PIN_A19	P6 / 2	Bidir	PMOD I/O [2] of P6	3.3 V
P6_IO3	PIN_B20	P6 / 3	Bidir	PMOD I/O [3] of P6	3.3 V
P6_IO4	PIN_A20	P6 / 4	Bidir	PMOD I/O [4] of P6	3.3 V
P6_IO5	PIN_A18	P6 / 7	Bidir	PMOD I/O [5] of P6	3.3 V

Board Reference	FPGA Pin No.	PMOD Header	Pin Func.	Description	I/O Std
P6_IO6	PIN_B18	P6 / 8	Bidir	PMOD I/O [6] of P6	3.3 V
P6_IO7	PIN_A17	P6 / 9	Bidir	PMOD I/O [7] of P6	3.3 V
P6_IO8	PIN_B17	P6 / 10	Bidir	PMOD I/O [8] of P6	3.3 V
GND	-	5, 11[4]	PWR	Ground	-
3.3V	-	6, 12[4]	PWR	3.3 V Power to PMODs	-

3.3.12 VGA

The C10LP RefKit provides VGA connectivity that allows users to display content on a monitor. The VGA uses a 4-bit resistor-network DAC which supports up to 640 × 480 resolutions at a 60Hz refresh rate with 4096 colors.

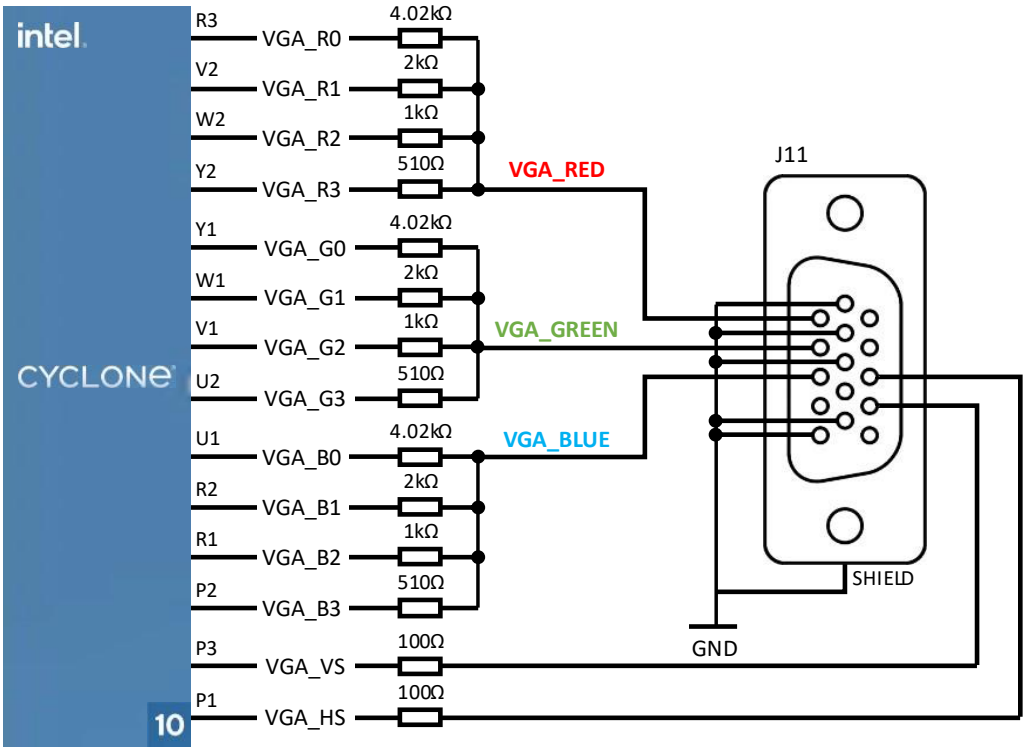

Figure 18 – VGA Connections

Board Reference	FPGA Pin No.	Pin Func.	Description	I/O Std
VGA_R0	PIN_R3	Output	VGA Red [0]	3.3 V
VGA_R1	PIN_V2	Output	VGA Red [1]	3.3 V
VGA_R2	PIN_W2	Output	VGA Red [2]	3.3 V
VGA_R3	PIN_Y2	Output	VGA Red [3]	3.3 V
VGA_G0	PIN_Y1	Output	VGA Green [0]	3.3 V
VGA_G1	PIN_W1	Output	VGA Green [1]	3.3 V
VGA_G2	PIN_V1	Output	VGA Green [2]	3.3 V

[4] Pins 5, 6, 11, and 12 applies to all, P1..6 PMOD connectors.

Board Reference	FPGA Pin No.	Pin Func.	Description	I/O Std
VGA_G3	PIN_U2	Output	VGA Green [3]	3.3 V
VGA_B0	PIN_U1	Output	VGA Blue [0]	3.3 V
VGA_B1	PIN_R2	Output	VGA Blue [1]	3.3 V
VGA_B2	PIN_R1	Output	VGA Blue [2]	3.3 V
VGA_B3	PIN_P2	Output	VGA Blue [3]	3.3 V
VGA_VS	PIN_P3	Output	Vertical Synchronization	3.3 V
VGA_HS	PIN_P1	Output	Horizontal Synchronization	3.3 V

The 4, 9, 11, 12, and 15 pins of the J11 connector are not connected.

3.3.13 LEDs

There is a total of 13 red user-controllable LEDs connected to the FPGA in two types of splits. 8 LEDs are arranged in a traditional row, and an additional 5 LEDs are arranged in a joystick shape according to the location of the pushbuttons. Each LED is driven directly and individually by the Cyclone 10 LP FPGA, driving its associated pin to a high logic level for on or low logic level for off.

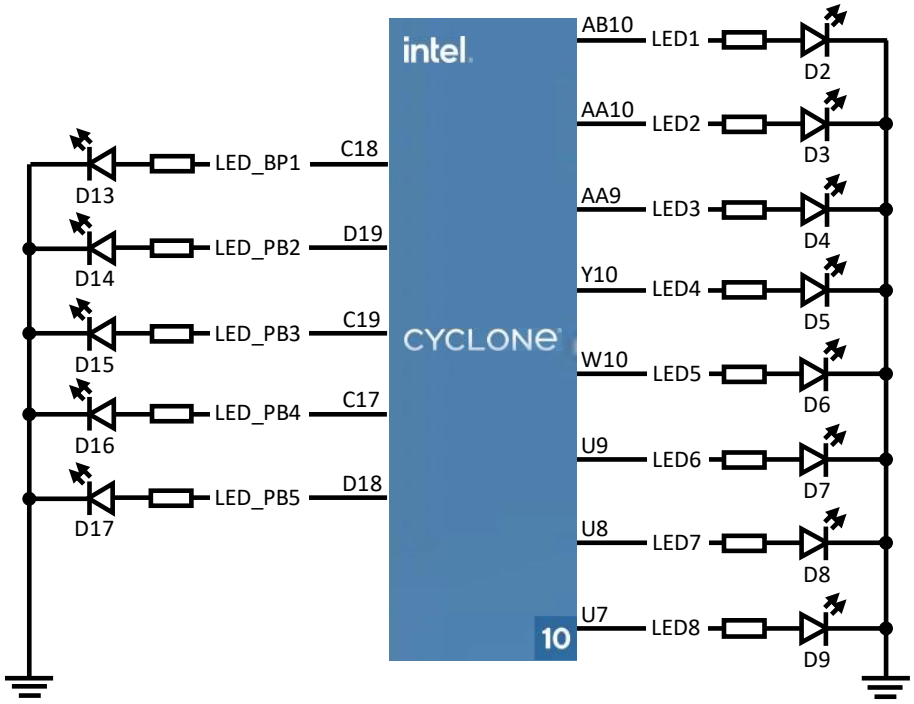

Figure 19 – LED Connections

Board Reference	FPGA Pin No.	Pin Func.	I/O Std
LED1	PIN_AB10	Output	3.3 V
LED2	PIN_AA10	Output	3.3 V
LED3	PIN_AA9	Output	3.3 V
LED4	PIN_Y10	Output	3.3 V
LED5	PIN_W10	Output	3.3 V
LED6	PIN_U9	Output	3.3 V

Board Reference	FPGA Pin No.	Pin Func.	I/O Std
LED7	PIN_U8	Output	3.3 V
LED8	PIN_U7	Output	3.3 V
LED_PB1	PIN_C18	Output	3.3 V
LED_PB2	PIN_D19	Output	3.3 V
LED_PB3	PIN_C19	Output	3.3 V
LED_PB4	PIN_C17	Output	3.3 V
LED_PB5	PIN_D18	Output	3.3 V

3.3.14 Push Buttons

The board has seven push buttons connected to the FPGA that allow users to interact with the Cyclone 10 LP FPGA device. 5 of them are placed in a joystick shape for better usability. Push buttons drive their associated pins low logic level when pressed and high logic level when released.

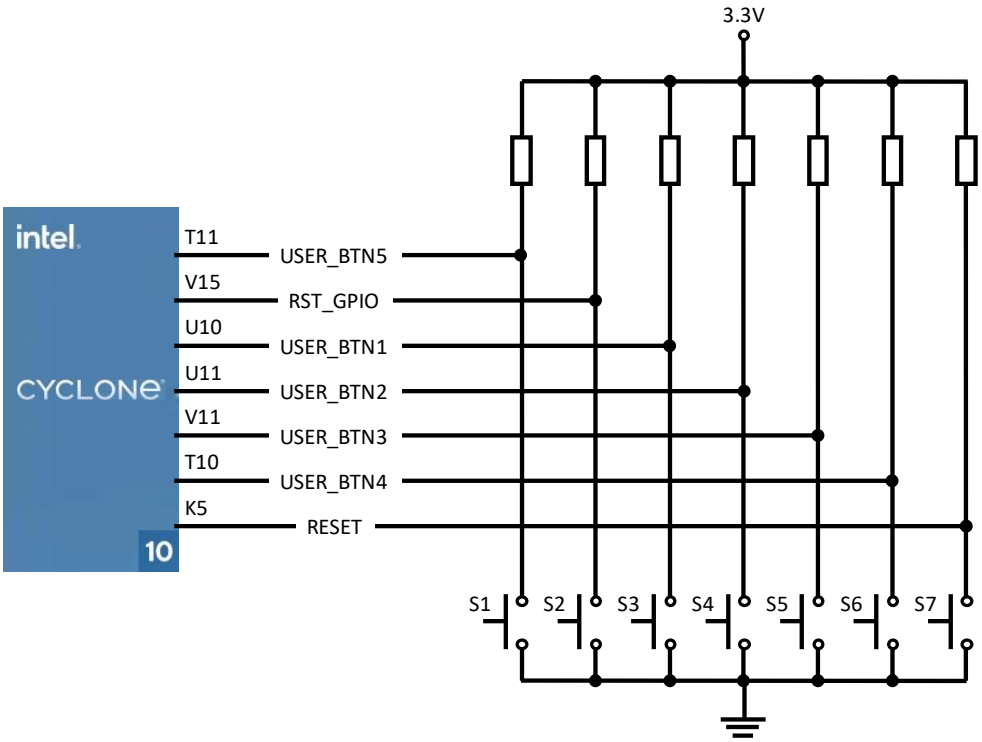

Figure 20 – Button Connections

Board Reference	FPGA Pin No.	Pin Func.	Description	I/O Std
RESET	PIN_K5	Input	nCONFIG	3.3 V
USER_BTN1	PIN_U10	Input	User button	3.3 V
USER_BTN2	PIN_U11	Input	User button	3.3 V
USER_BTN3	PIN_V11	Input	User button	3.3 V
USER_BTN4	PIN_T10	Input	User button	3.3 V
USER_BTN5	PIN_T11	Input	User button	3.3 V
RST_GPIO	PIN_V15	Input	User button	3.3 V

3.3.15 7-segment LED Display

The C10LP RefKit board has a Quadruple seven-segment LED display to display numbers. This display has a multiplex common anode structure to reduce the number of control signals.

The connections and the structure of the display are shown in the figures below.

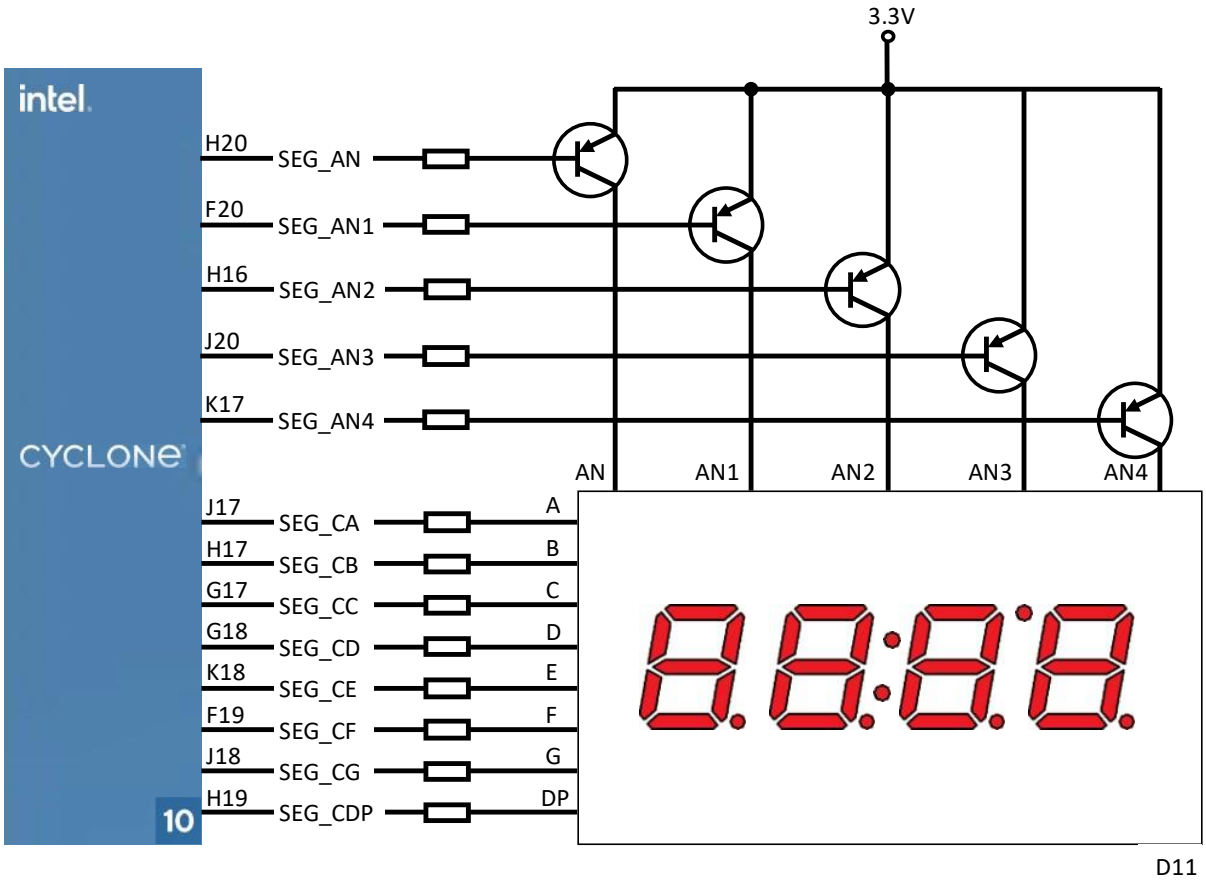

Figure 21 – 4-digit 7-segment Display Connections

Board Reference	FPGA Pin No.	LED Display	Pin Func.	Description	I/O Std
SEG_AN	PIN_H20	AN	Output	Common Anode for L1, L2 and L3	3.3 V
SEG_AN1	PIN_F20	AN1	Output	Common Anode for Digit 1	3.3 V
SEG_AN2	PIN_H16	AN2	Output	Common Anode for Digit 2	3.3 V
SEG_AN3	PIN_J20	AN3	Output	Common Anode for Digit 3	3.3 V
SEG_AN4	PIN_K17	AN4	Output	Common Anode for Digit 4	3.3 V
SEG_CA	PIN_J17	A	Output	Segment A or L1	3.3 V
SEG_CB	PIN_H17	B	Output	Segment B or L2	3.3 V
SEG_CC	PIN_G17	C	Output	Segment C or L3	3.3 V
SEG_CD	PIN_G18	D	Output	Segment D	3.3 V
SEG_CE	PIN_K18	E	Output	Segment E	3.3 V
SEG_CF	PIN_F19	F	Output	Segment F	3.3 V
SEG_CG	PIN_J18	G	Output	Segment G	3.3 V
SEG_CDP	PIN_H19	DP	Output	Decimal Point	3.3 V

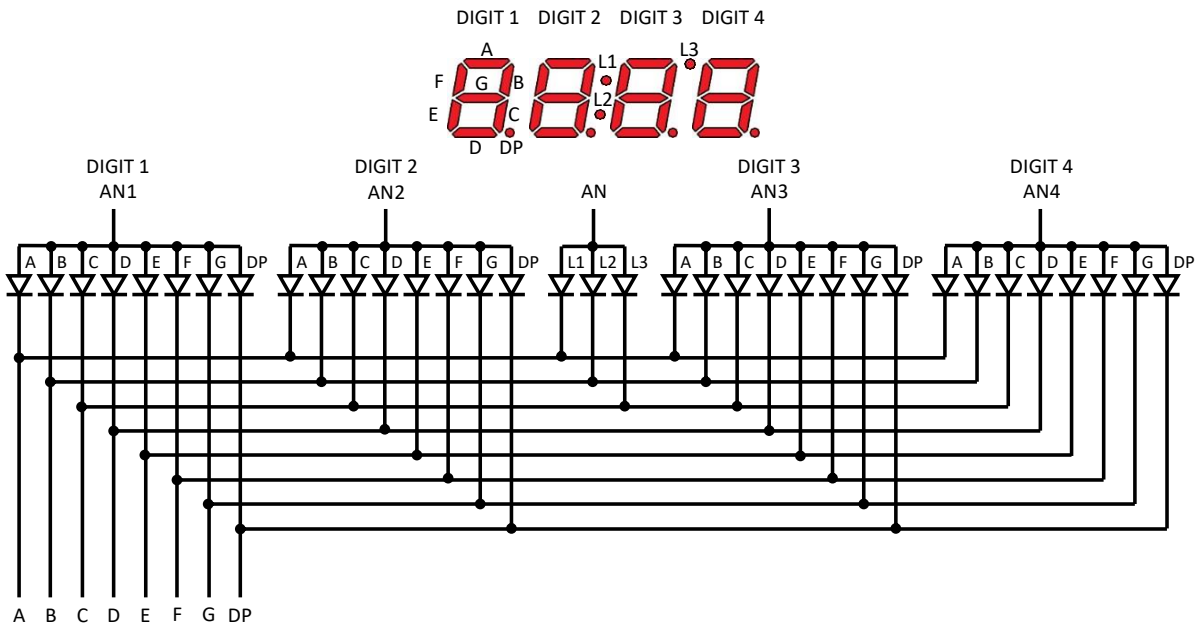

Figure 22 – Quadruple Seven-segment LED Display's Internal Circuit Diagram

3.3.16 Power Tree

The Cyclone 10 LP RefKit is powered by circuit Enpirion's buck regulator which provides high efficiency on a small layout. The board is powered through a 2.0mm DC Jack connector. All devices are powered by a 3.3V voltage line and the 5V and 3.3V lines are fed back to the Arduino header to power that connection if needed. The Cyclone 10 LP FPGA is powered by 2 Enpirion devices.

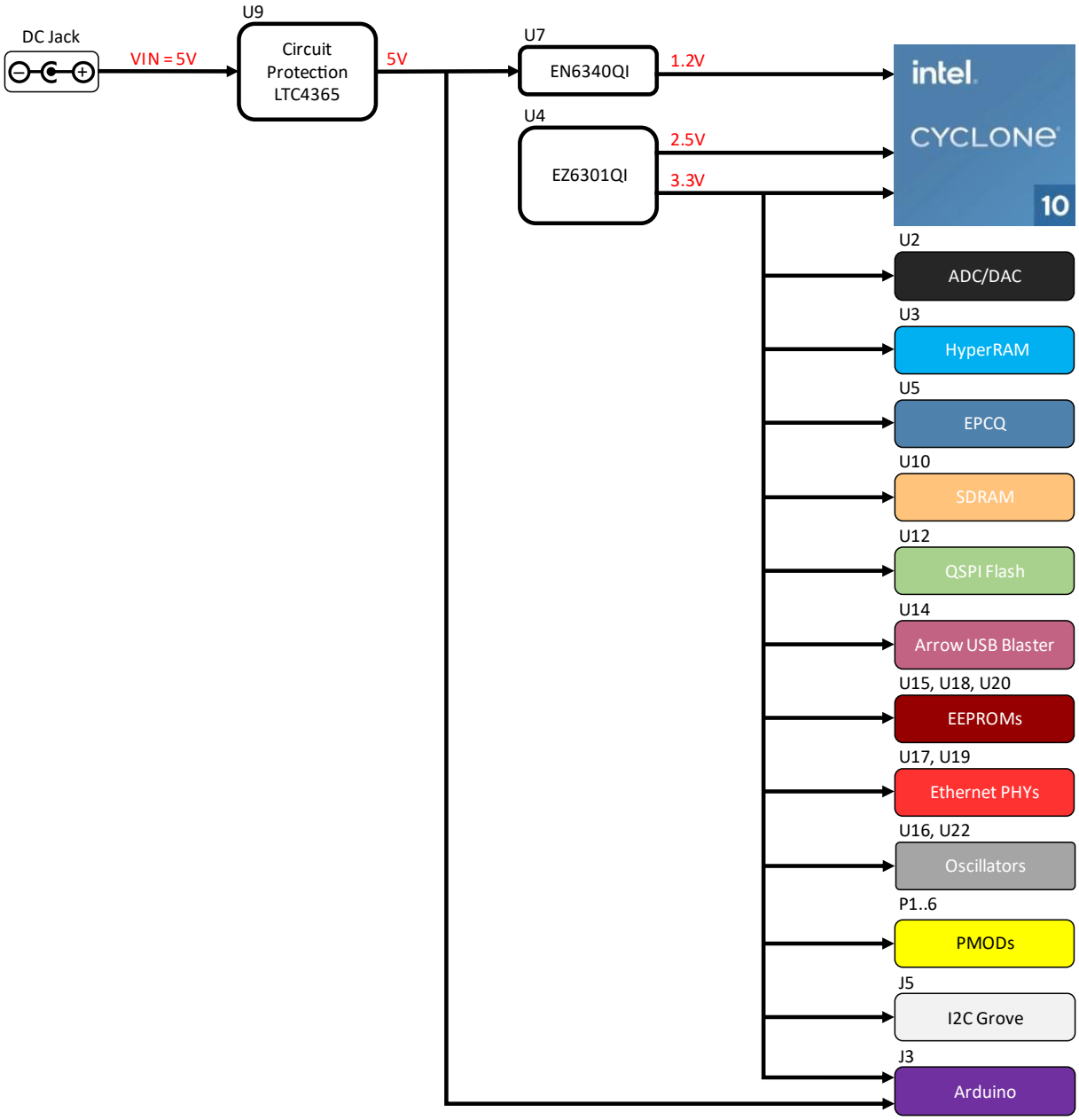

Figure 23 – Power Tree Connections

Chapter 4 - Software and Driver Installation

Firstly, it is required to create your Basic Intel Account if you don't own one already. It is required to download the software. Below are guides for installing the software and drivers for Windows operating systems.

4.1 Installing Quartus Prime Software

4.1.1 Go to the Intel Download Center: Link.

4.1.2 Select **Windows** as the operating system (highlighted in red).

4.1.3 Select Release **21.1**, or your preferred version (highlighted in red).

4.1.4 Download the following files from the "Individual Files" tab (highlighted in yellow):

- Quartus Prime Lite Edition (Free)
- Questa – Intel FPGA Edition (includes Starter Edition)
- Cyclone 10 LP device support

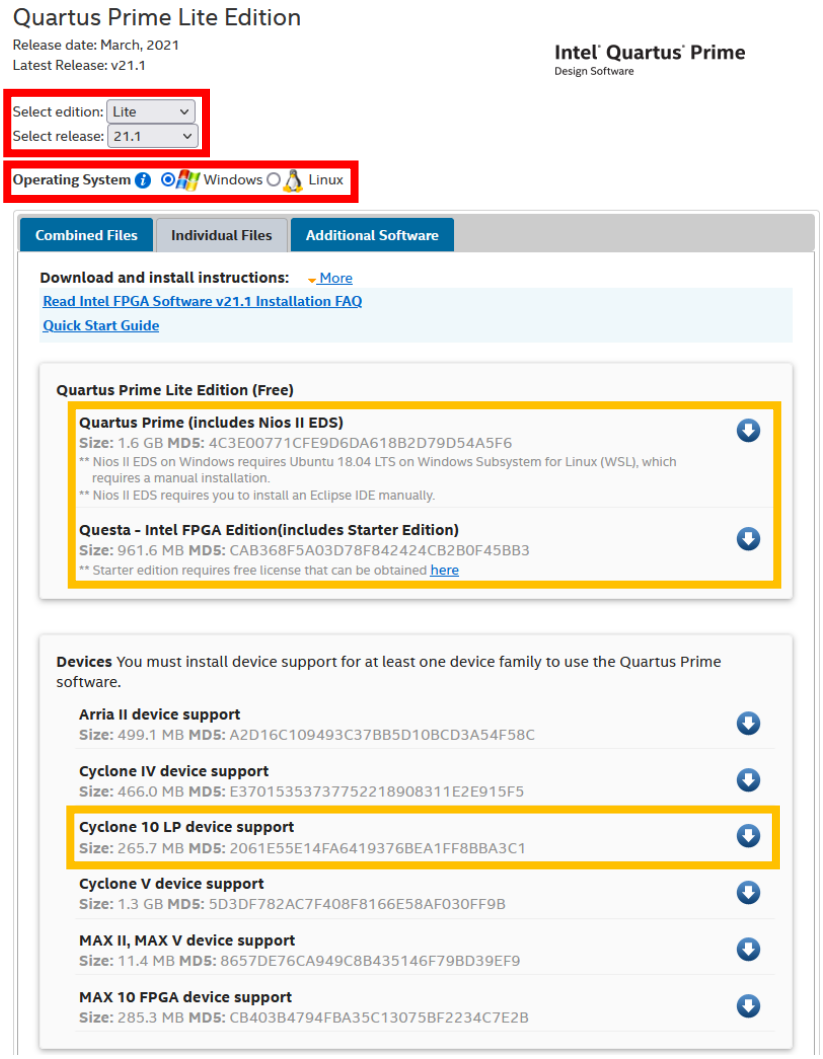

4.1.5 Click on button to begin the download and save them in the same folder.

4.1.6 After the download is finished, run the Quartus Prime installer.

4.1.7 When prompted to select the components, the installer will automatically detect the Cyclone 10 LP device support and Questa packages when they are in the same folder. Make sure these components are selected:

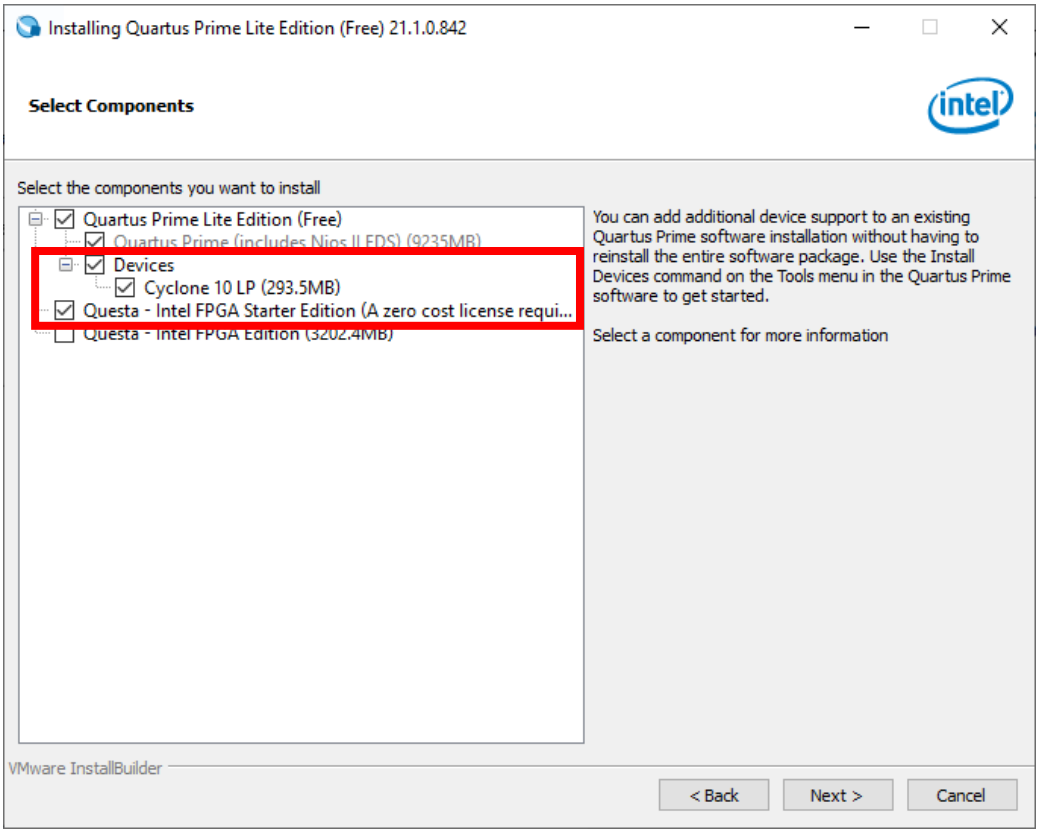

4.1.8 Finish the installation of the Quartus Lite and proceeded to the next section to install Arrow USB Programmer2 to be able to connect to the C10LP RefKit board.

4.2 Installing Arrow USB Programmer2

The Cyclone 10 LP RefKit board uses version 2 of the Arrow USB Programmer2 programming solution, that is an FTDI FT2232H Hi-Speed USB controller plus a programmer DLL. Since this FTDI USB controller is a very common standard device, usually no specific drivers are needed to make the C10LP RefKit work.

4.2.1 Download the appropriate version[5] of Arrow USB Programmer2 for C10LP RefKit from Trenz Electronic Wiki page or alternatively this direct link.

[5]Modules produced after June 2020 are no longer compatible with older drivers. Please install driver version 2.4 or newer.

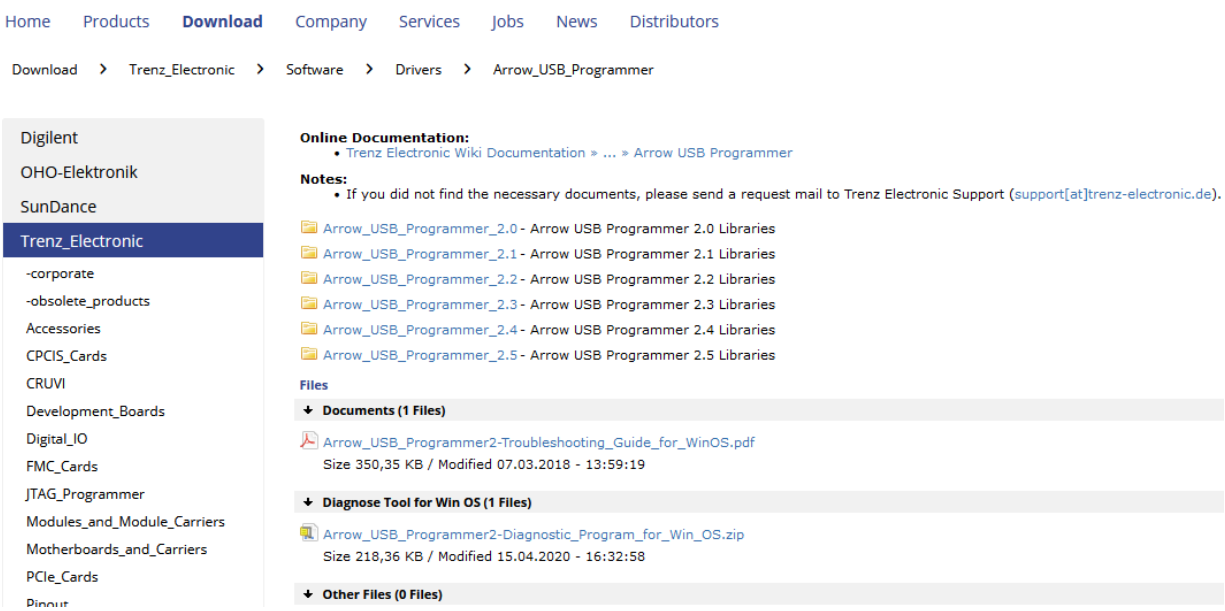

4.2.2 After downloading the file, run the installer to install the Arrow USB Programmer2. The setup executable installs the programmer DLL and adds some keys to the registry of the PC.

4.2.3 After connecting the C10LP RefKit board to the PC, two unknown devices might appear in the "Other devices" section of device manager of the PC.

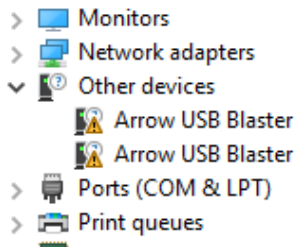

Windows usually automatically finds the appropriate drivers for these devices. After some time, the "Other devices" section should be empty. Instead, two USB Serial Converters should be listed in the section "USB Serial Bus controllers":

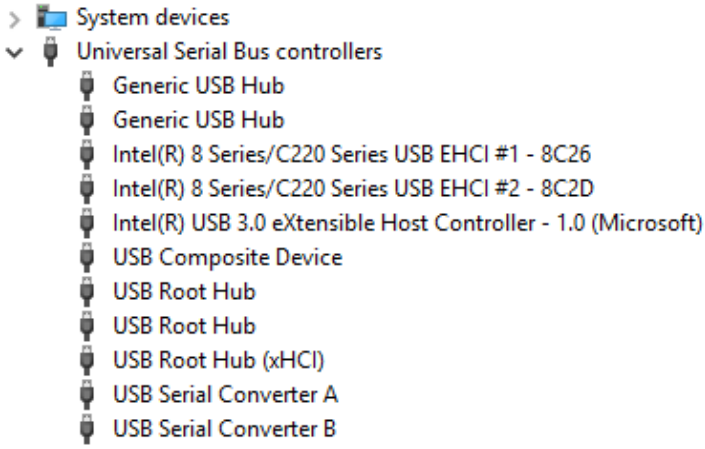

Furthermore, a USB Serial Port should be listed in the "Ports (COM & LPT)" section.

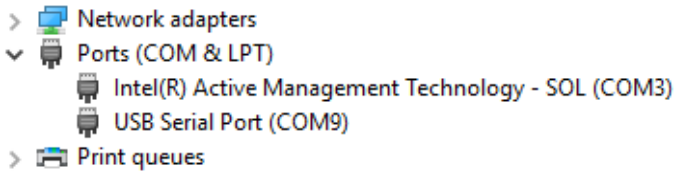

Note that the number of the port will most probably be different from the one shown here.

In case Windows does not automatically find the appropriate drivers go to http://www.ftdichip.com/Drivers/D2XX.htm to download the setup executable to install the required drivers.

4.3 License

Quartus Lite does not require a license, its use is completely free. However, even though Questa Starter Edition can be used free of charge, you need to generate a free license for it.

4.3.1 Log in to Intel FPGA Self-Service Licensing Center
4.3.2 Go to Sign up for **Evaluation or Free Licenses** tab
4.3.3 Select **Questa*-Intel® FPGA Starter Edition SW-QUESTA** option
4.3.4 Set the seats and accept the terms of use this license

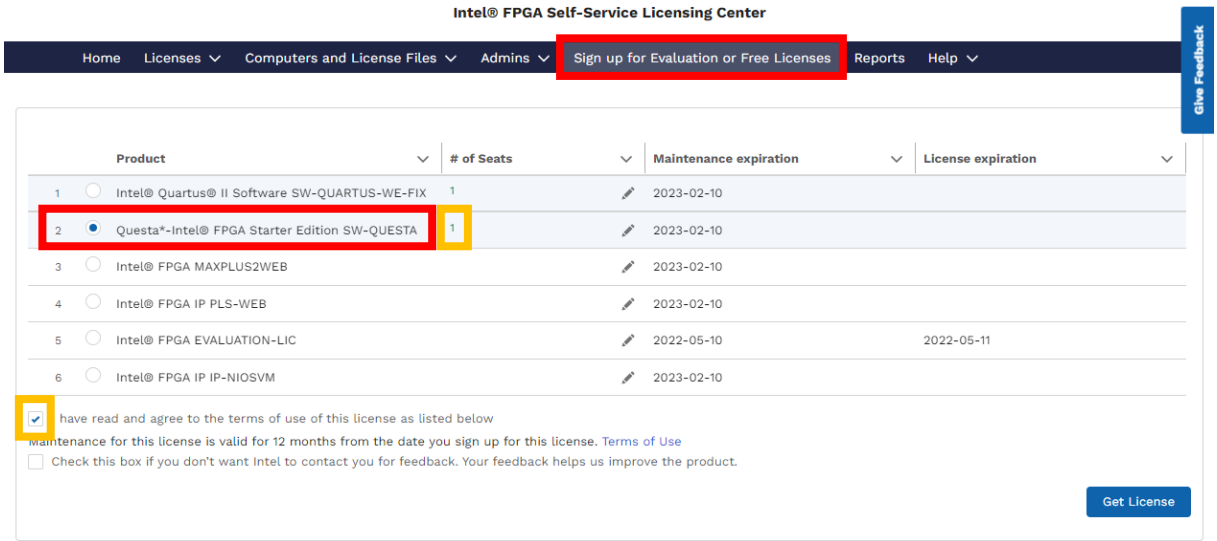

4.3.5 Click on Get License button
4.3.6 In the pop-up window select **+New computer** under Create a New Computer
4.3.7 In the Create Computer window, fill in the fields with your computer details and click on Generate License.

The license file will be provided by email, or you can also download it under Intel® FPGA Self-Service Licensing Center.

Chapter 5 - New Project with Cyclone 10 LP RefKit

5.1 Creating a new Blinky Project with Cyclone 10 LP RefKit

5.1.1 Launch Quartus Prime Lite Edition from the Start Menu.

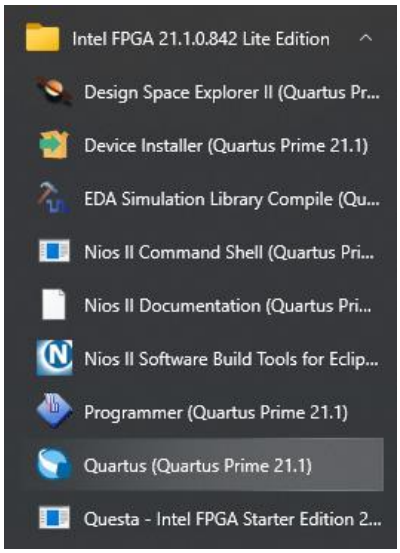

5.1.2 In the Quartus Prime tool, create a new project: **File -> New Project Wizard.**

The New Project Wizard walks you through the project settings, such as the name, directories, files, directories, device family and other settings. These settings can be changed later if needed.

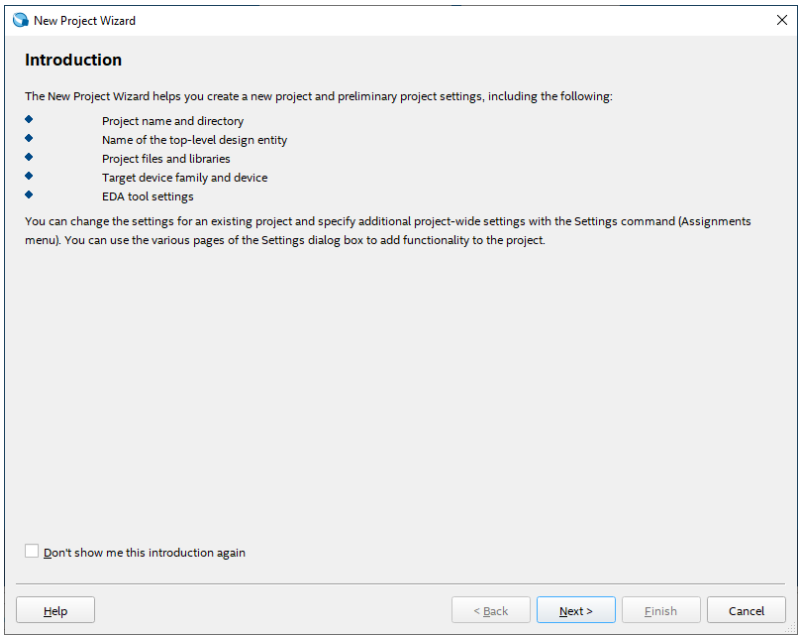

5.1.3 Click “Next”.

5.1.4 Browse in the project directory and choose a preferred location for the new project. Then create new folder named C10LPRefKit_blinky. This will be the folder containing all the project files.

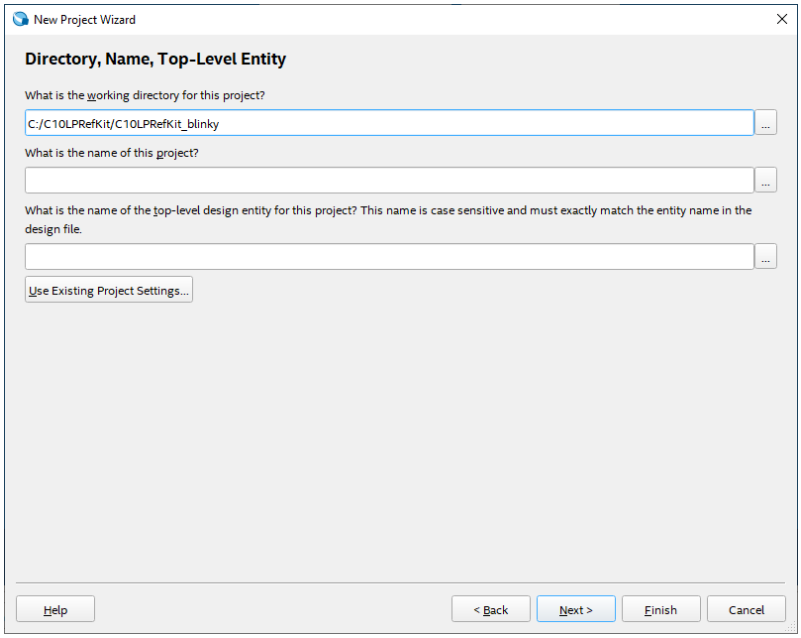

5.1.5 Enter the project name: “top”.

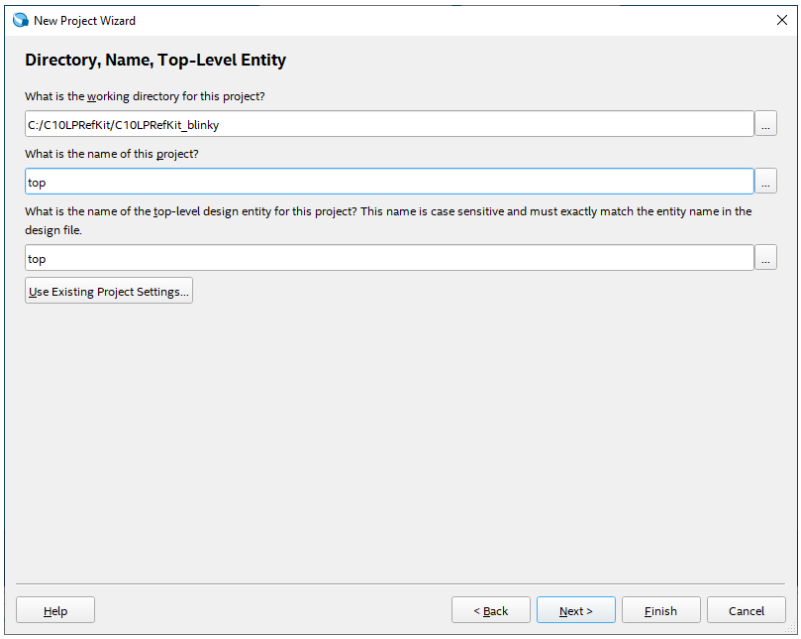

5.1.6 Click “Next”.

5.1.7 Project Type

In this page you choose the Project Type. In this tutorial, a new project will be created, and thus the default settings of empty project should be selected.

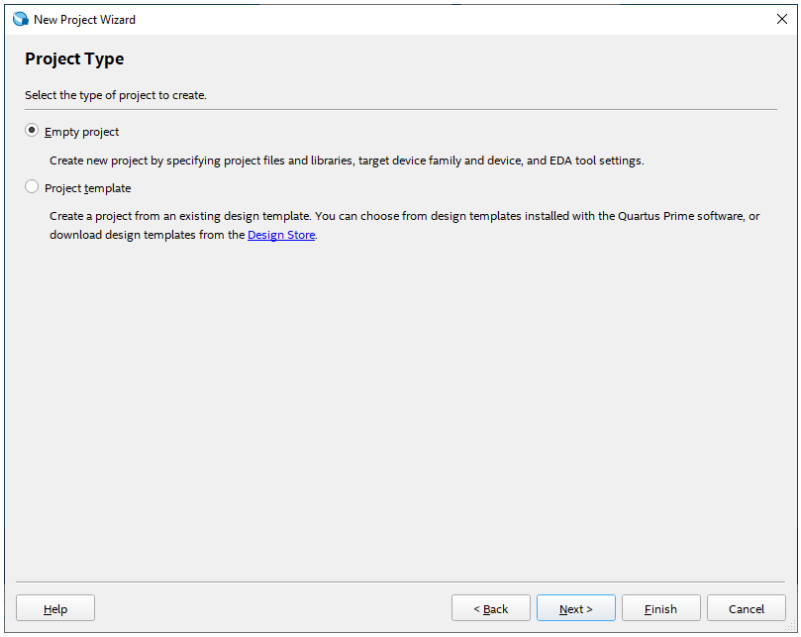

5.1.8 Click “Next”.

5.1.9 Add Project Files

The Add File window will appear. For this tutorial, new design files will be created so no files will be added. For other designs, files could be added here.

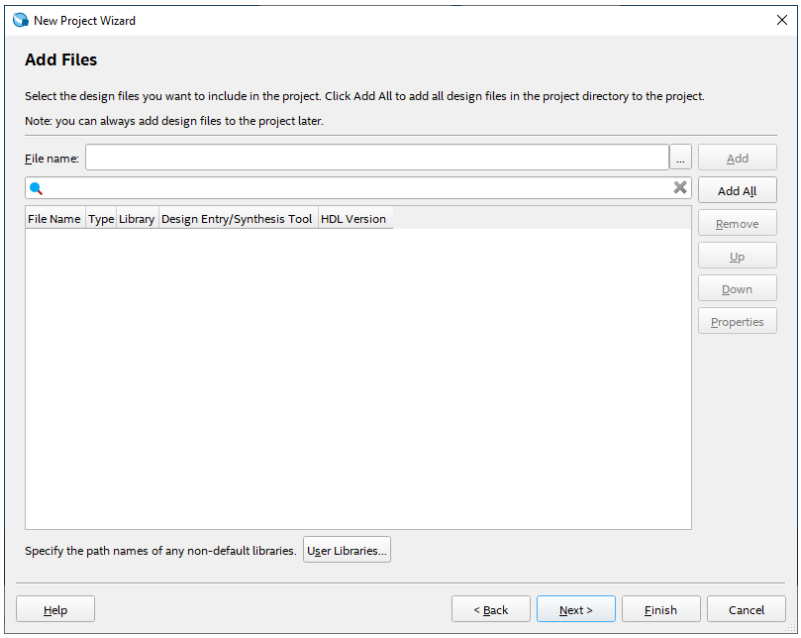

5.1.10 Click “Next”.

5.1.11 Select the Device Part Number of the C10LPRefKit Board

In the Family and Device Settings, use the pull-down menu to select the family as Cyclone 10 LP. Then in the Name Filter enter **10CL055YU484C8G**.

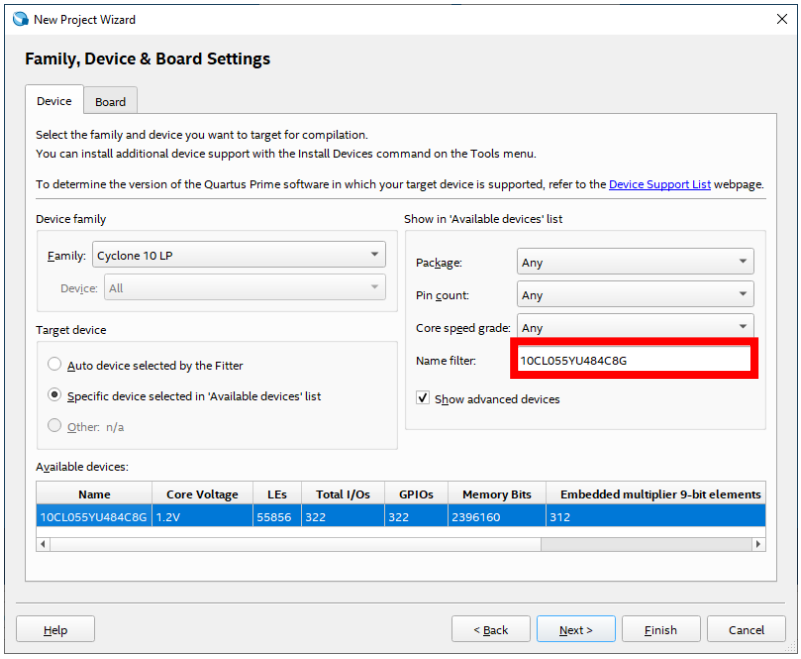

Rather than entering the exact part number, the pull-down menus can be used to select the correct family, package, pin count, and speed grade. Quartus Prime will use these settings to compile the design, and also provide the programming file that you will use later to program the device.

5.1.12 Click “Next”.

5.1.13 EDA Tool Settings

In the EDA tool Settings window, disable any EDA tools, if there are any present. EDA tools are third party tools that work with Quartus Prime for design entry, simulation, verification, and board-level timing. For this tutorial, no EDA software will be used, as only Quartus Prime will be used.

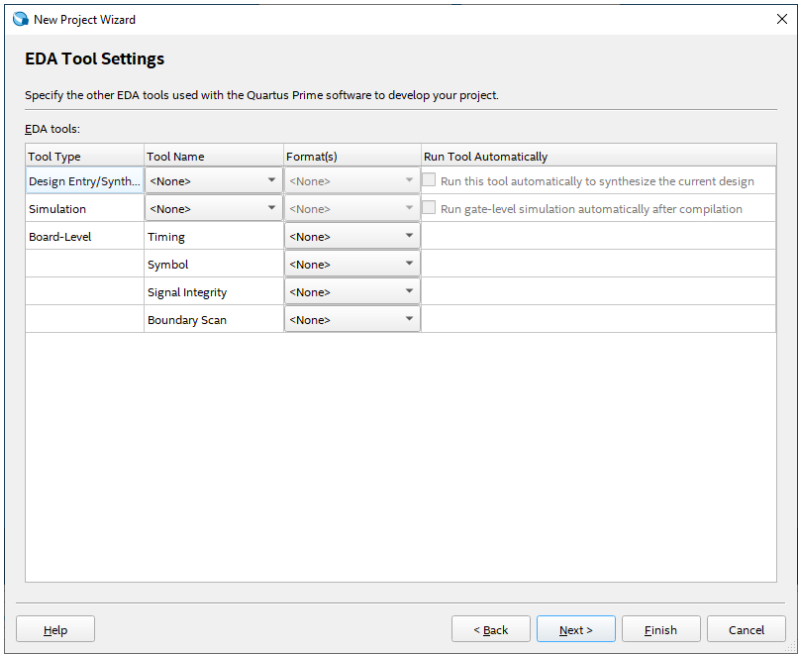

5.1.14 Click “Next”.

5.1.15 Project Summary Page

This is the Summary Page that shows the settings Quartus Prime will use for this Project. Those settings can be changed if required later.

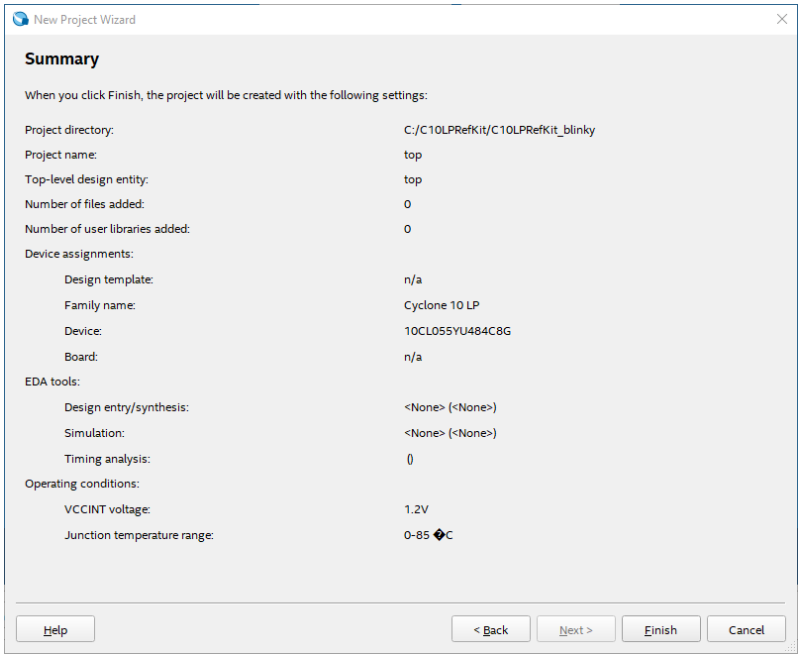

5.1.16 Click “Finish”.

5.2 Building a Blinky Project with Cyclone 10 LP RefKit

Overview: In this section you will create the components to a design, make connections, set the pins, and compile a project. The goal is to go through the design process of a simple blinky project, where the toggle speed of the LEDs could be controlled by one of the pushbuttons of the C10LP RefKit.

5.2.1 Block Diagram

The final system that will be built with the following steps will look as follows when complete:

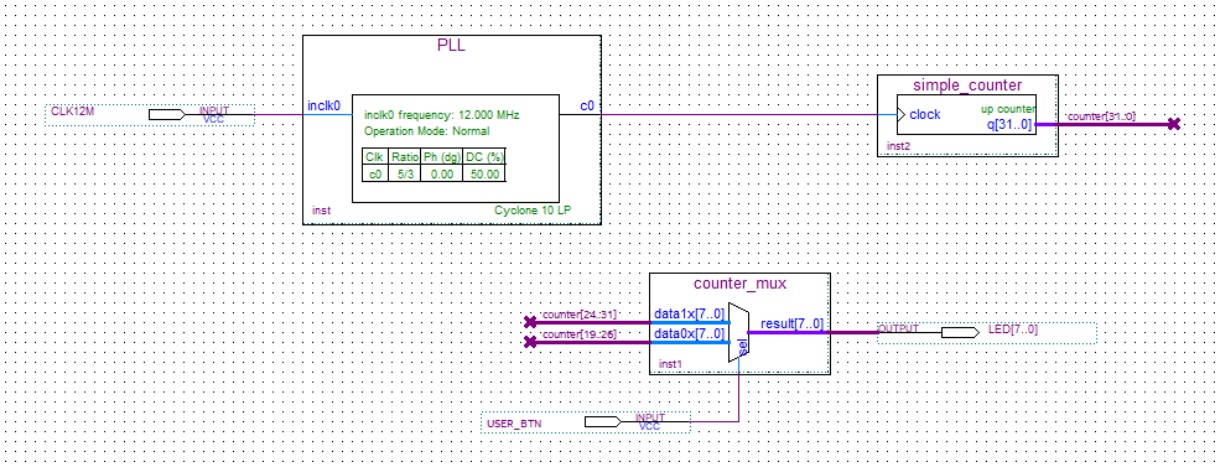

5.2.2 Components of the Design

There are three components in the system: a PLL, a counter and a mux. The components, in the following steps, will be built separately and then connected together. A user push button on the board controls the mux. The mux in turn control which of the counter outputs (slow counting or fast counting) will be shown on the LEDs. There are different ways to create components, such as RTL or schematic. In this lab, schematics will be used. There are also different ways for entering schematics such as Qsys and IP Catalog. This lab will focus on the IP Catalog.

5.2.3 Catalog IP

The IP Catalog allows you to create and modify design files with custom variations. The IP Catalog window is open by default when you open Quartus Prime. If it's not present, you can open it by going to the tab **Tool → IP Catalog**.

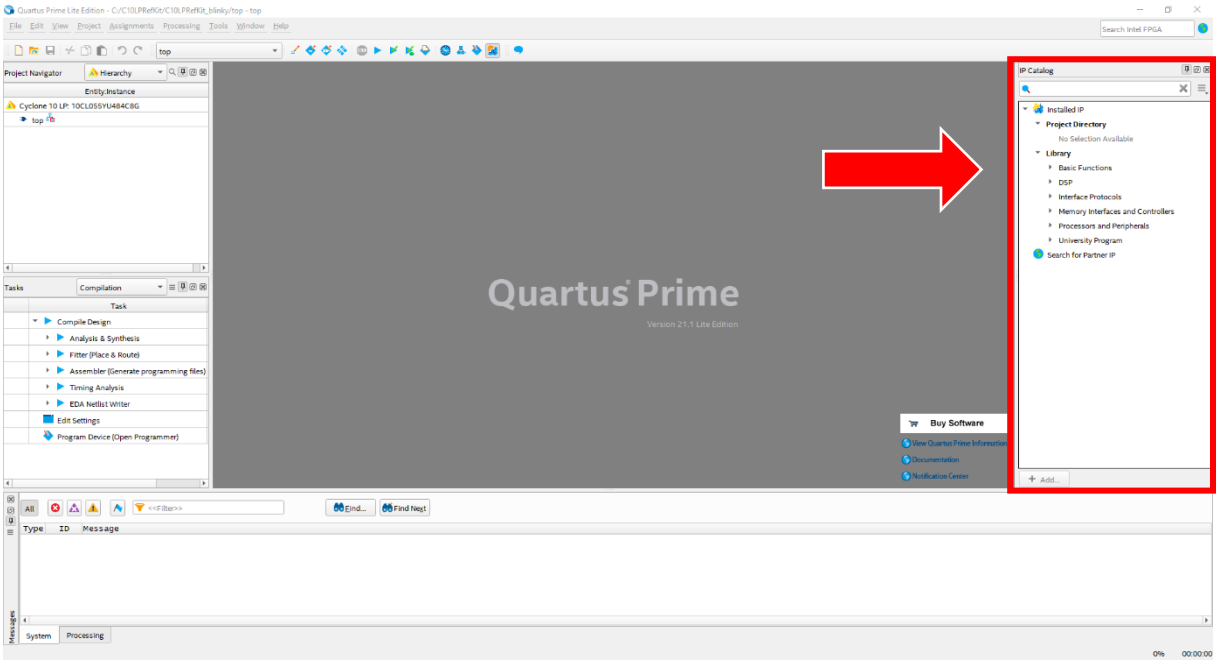

5.2.4 Create and Configure PLL

In the IP Catalog, browse for ALTPLL, via: Basic Functions → Clocks; PLLs and Resets → PLL or type in the search field for "PLL".

5.2.4.1 In the Search bar of the IP Catalog, type "pll" and select **ALTPLL** which stands for Altera Phase Locked Loop.

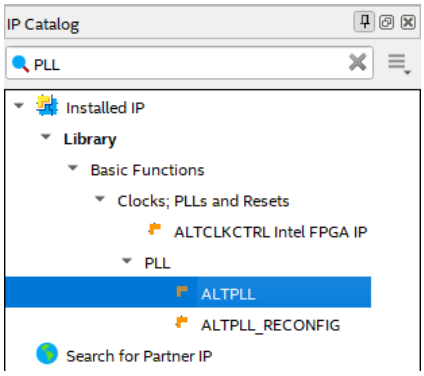

5.2.4.2 Click “Add”. When the Save IP Variation window appears, enter the file name variation as PLL and select VHDL (Verilog can be used as well). Both Verilog and VHDL schematics will be created.

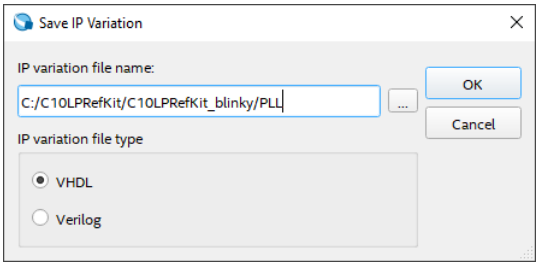

5.2.4.3 Click “OK”.

The next step is to configure the PLL component that we just named.

5.2.4.4 Enter the PLL reference clock frequency to match the clock input on the C10LP RefKit Board. We have 12 MHz and 25MHz clock signals coming into the FPGA, in this example, we will use 12MHz for the inclk0 input.

The setting should look like this:

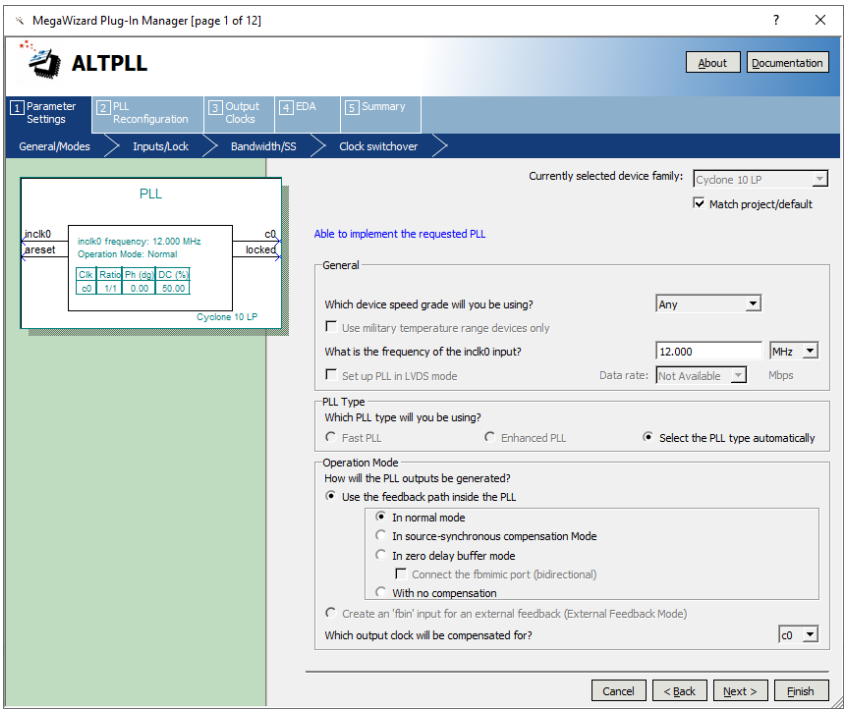

5.2.4.5 Click “Next”.

5.2.4.6 Simplify the PLL, by disabling ‘areset’ and ‘locked output’.

The setting should look like this:

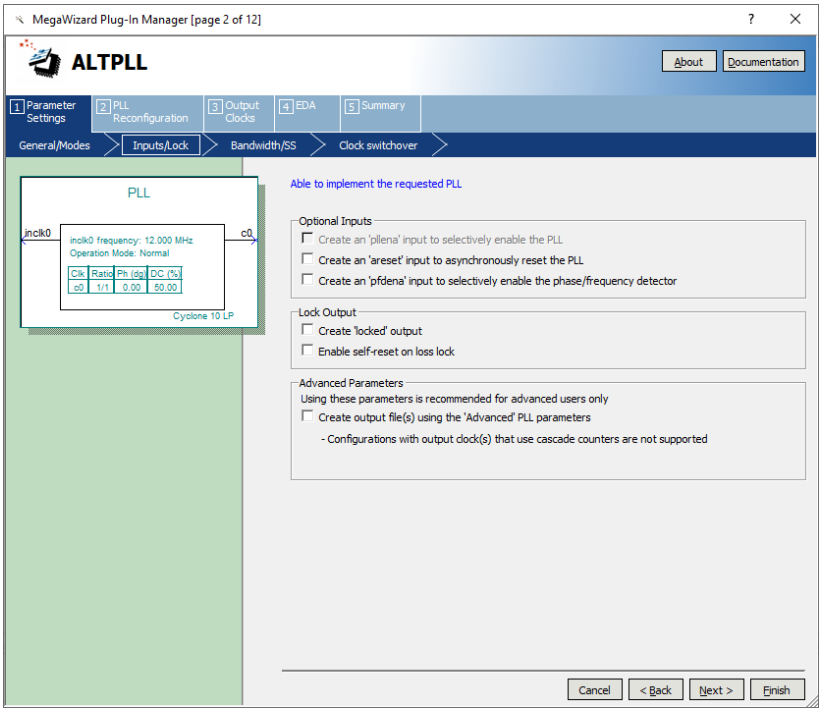

5.2.4.7 Click “Next”.

5.2.4.8 Continue to select Next to go through the various options (from Pages 3 to Pages 5) but leaving the default options as they are. The page numbers can be seen on the top of the window.

5.2.4.9 On page 6, (c0-Core/External Output Clock) select “Enter output clock frequency” and set the requested setting to 20 MHz, leave the rest as default. For simplification, there is one input to the PLL (12 MHz), and one output of the PLL (20 MHz)

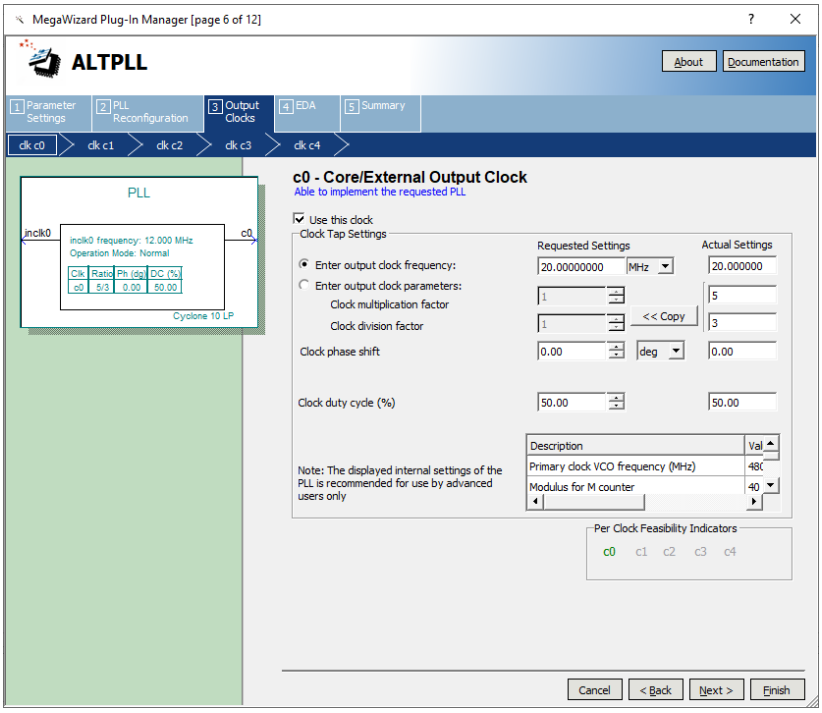

5.2.4.10 Click “Next” until reaching page 12.

5.2.4.11 On page 12 there is a list of output files that will be generated. Since the design will be done in a schematic, you will need to select PLL.bsf checkbox. The .bsf file provides a symbol that can be used in the schematic design we will be creating later.

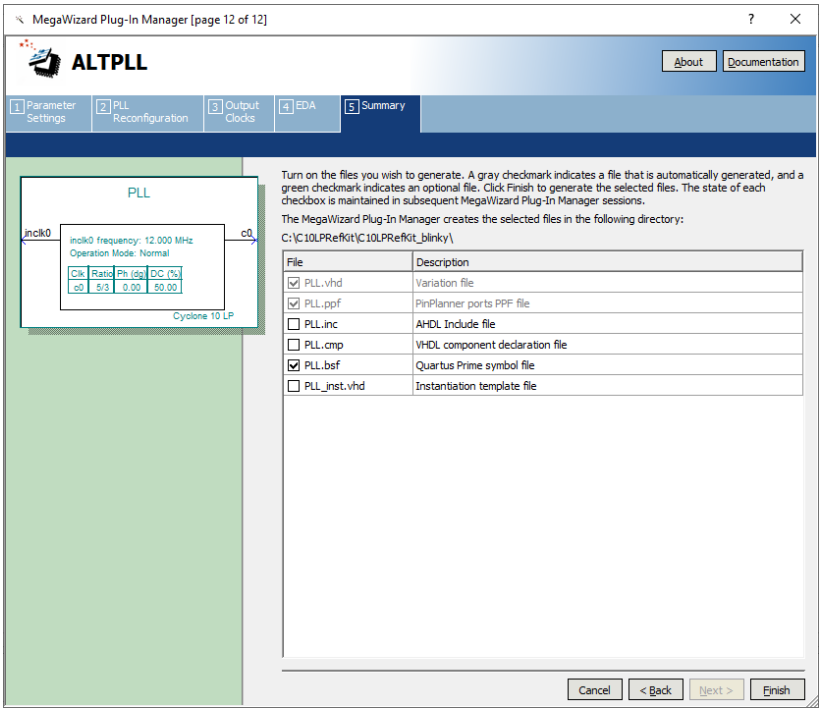

5.2.4.12 Click “Finish”. The PLL (1st component) will now be created.

5.2.4.13 If this is the first time that you are using this version of Quartus Prime, you might see a pop-up Window for Quartus Prime IP Files, that asks if the tool should add IP files automatically after generating them.

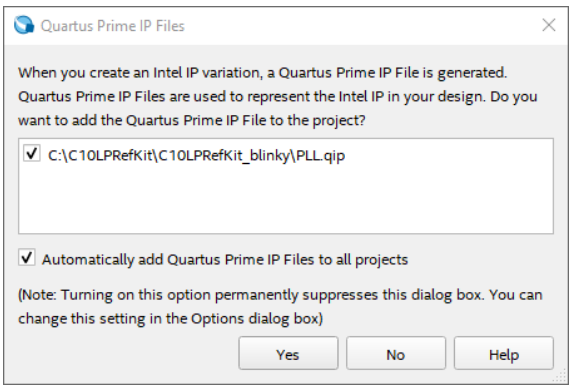

5.2.4.14 Select “Automatically add Quartus Prime IP Files to all projects”.

5.2.4.15 Click “Yes” to allow all of the IP to automatically be added to the project, and so that this message will not be seen for other designs.

5.2.5 Create and Configure the Counter

The next step is to create the counter which will drive the LEDs on the C10LP RefKit board.

5.2.5.1 To create this counter, select the IP Catalog and expand the **Basics → Arithmetic** and select the LPM_COUNTER or type "counter" in the search field.

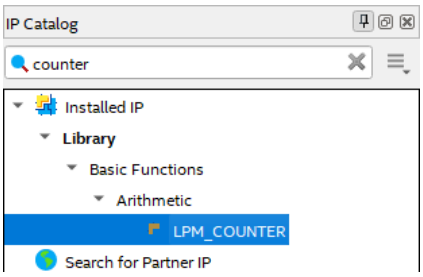

Note that the LPM stands for Library of Parameterized Modules

5.2.5.2 Click "Add".

5.2.5.3 When the Save IP Variation pop up appears, enter "simple_counter" and select VHDL as below:

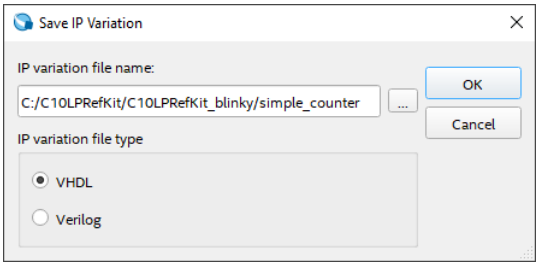

5.2.5.4 Click "OK".

5.2.5.5 The next step is to increase the size of the counter to a number of bits large enough to divide down the clock so we can see the LEDs toggling.

5.2.5.6 Change this number to 32.

5.2.5.7 Let the counter to be Up only, so the LEDs will show the counters counting up.

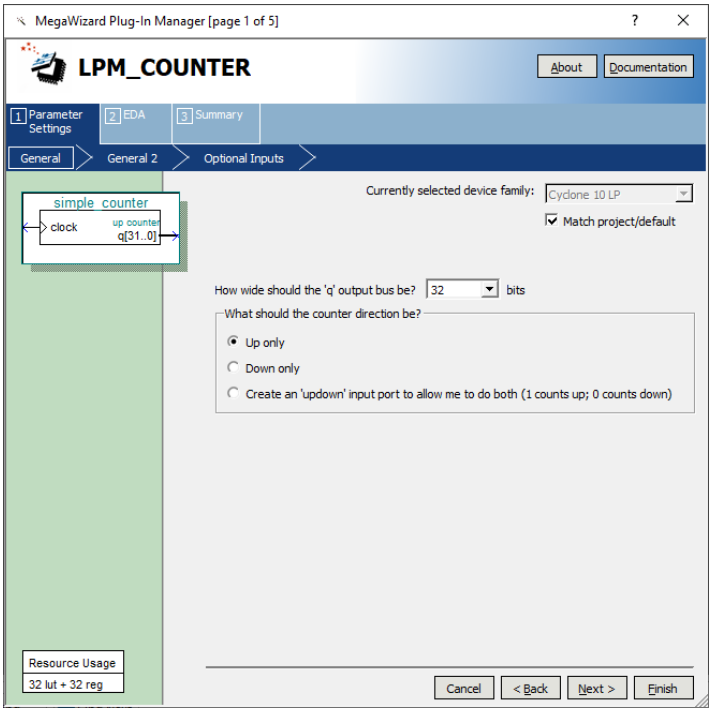

5.2.5.8 Select “Next” until reaching Page 5.

5.2.5.9 Select simple_counter.bsf checkbox to generate a symbol for our schematic design.

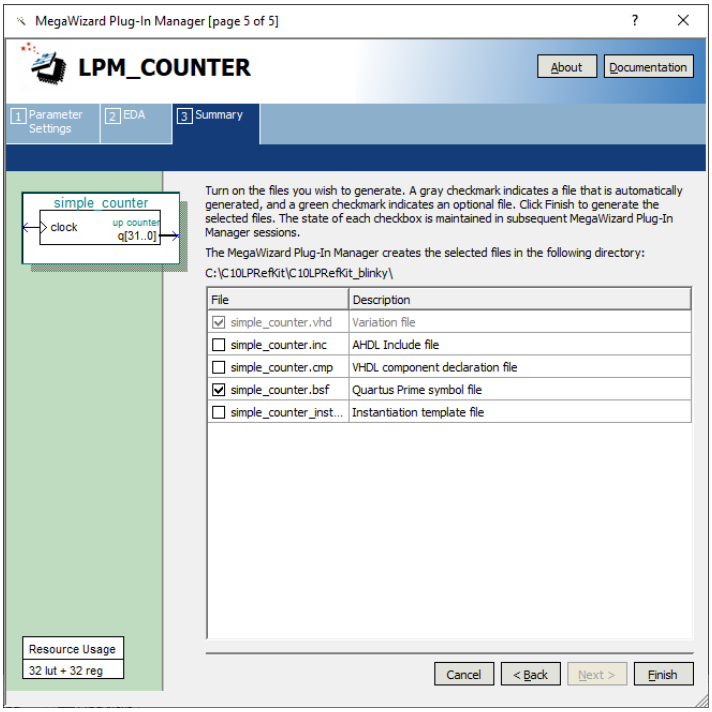

5.2.5.10 Click “Finish”.

The counter is now created.

5.2.6 Create and Configure the Multiplexer

The next step is to create a mux component. This mux will be used along with a push button on the C10LP RefKit board to control the speed of the counter, where the counter outputs will be seen on the LEDs.

5.2.6.1 To create this mux, select IP Catalog and expand **Basic Functions → Miscellaneous** and select LPM_MUX or type mux in the search field.

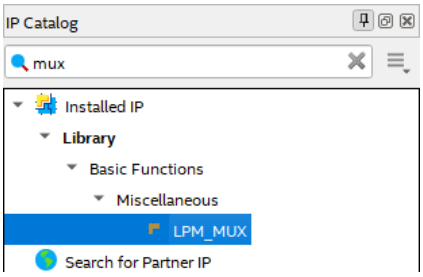

5.2.6.2 Click “Add”.

5.2.6.3 In the Save IP Variation, enter the name of the counter_mux and the file type to be VHDL.

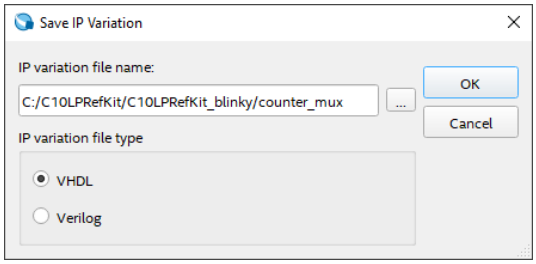

5.2.6.4 Click “OK”.

5.2.6.5 Select 2 data inputs and the width of the input and output buses to be 8 bits. The reason for 8 bits is that there are 8 LEDs to be toggled (showing count values).

The screen should look like this now:

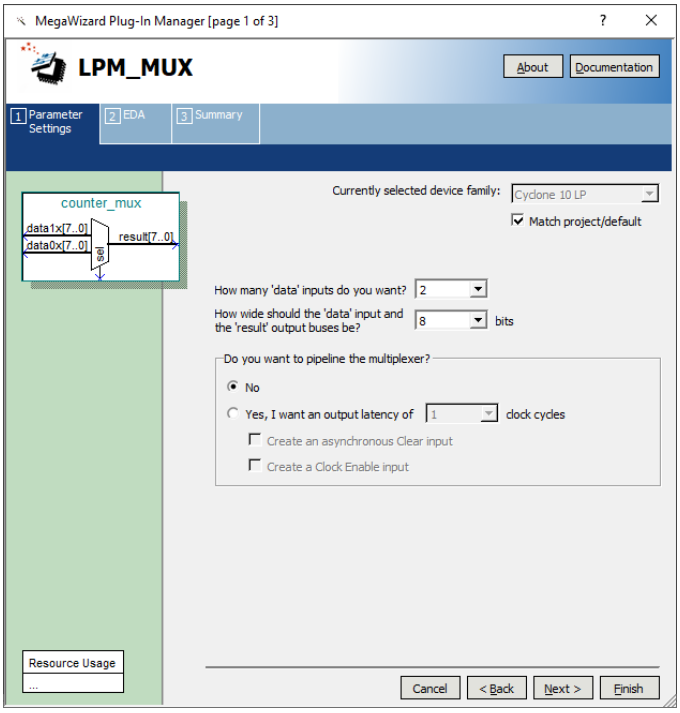

5.2.6.6 Click “Next” until Page 3.

5.2.6.7 Select counter_mux.bsf checkbox to generate a symbol for our schematic design.

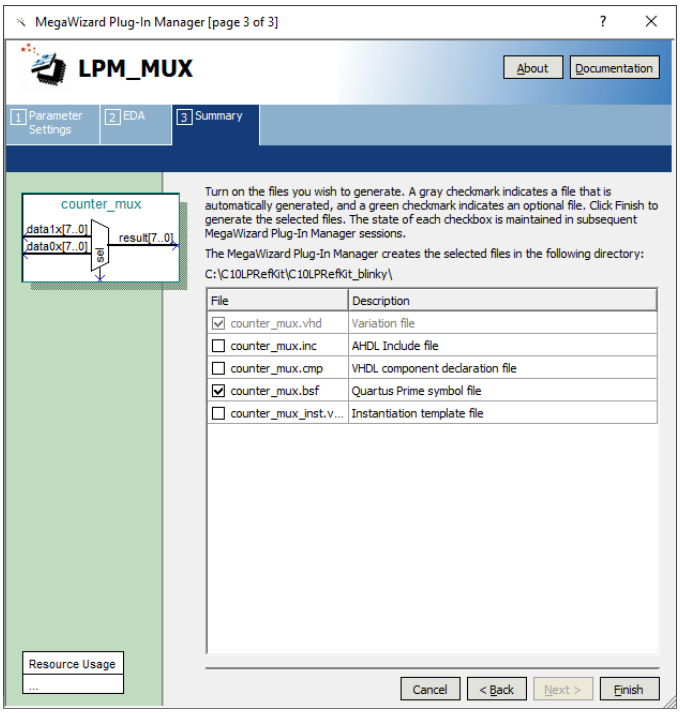

5.2.6.8 Click “Finish”.

5.2.7 Adding the Components to the Schematic

The next step would be to connect all three components together.

5.2.7.1 To do so, select File menu, then select New and select Block Diagram/Schematic File.

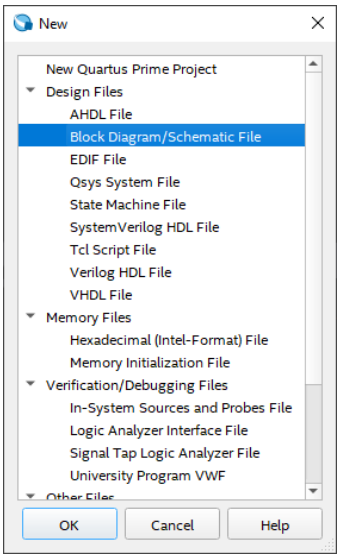

5.2.7.2 Click “OK”.

A new schematic will be created, where the components can be added.

5.2.7.3 Right click on the schematic page and select **Insert → Symbol…** as seen below.

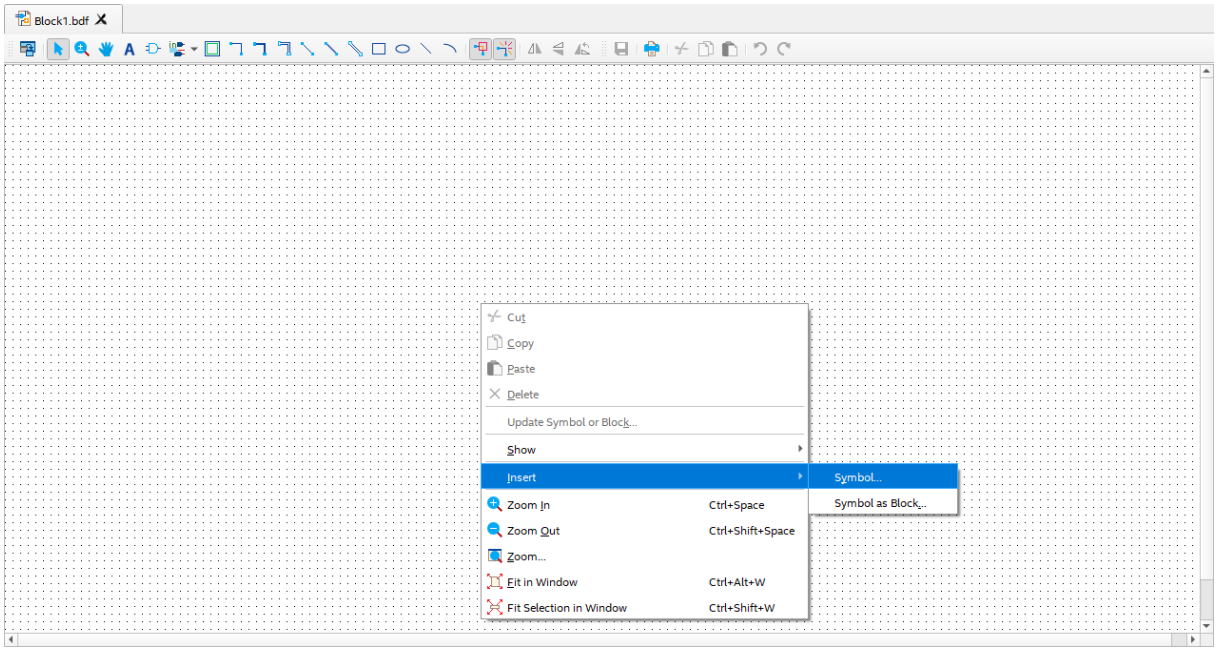

5.2.7.4 In the new window, expand “Project” and the three components that were created can now be seen.

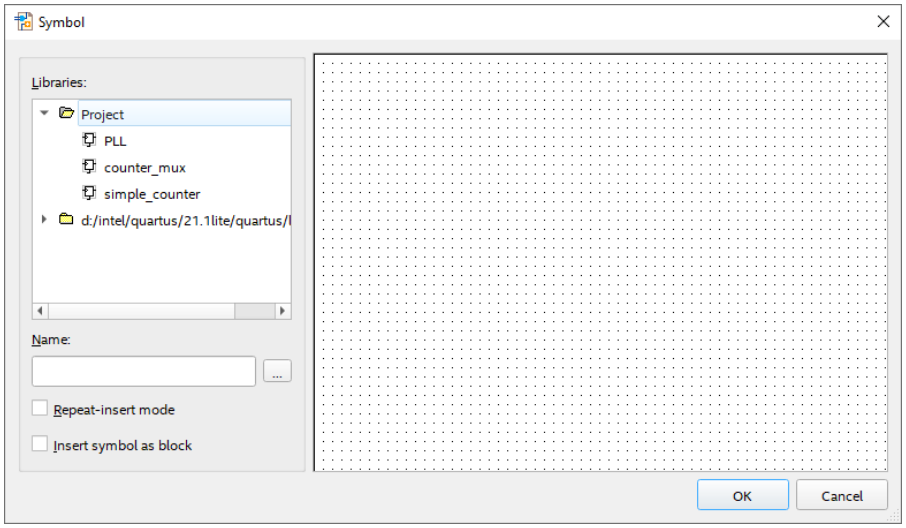

5.2.7.5 Select “PLL”.

5.2.7.6 Click “OK”.

5.2.7.7 The PLL component can be added now by left clicking on the schematic page.

5.2.7.8 Just like in the steps from 5.2.7.3 to 5.2.7.6, do the same for counter_mux and simple_counter to add them to the schematic page. The order of adding the components does not matter, as the connections between them will happen in the following steps.

5.2.7.9 After adding three components, your schematic should look similar to the following. To place them similarly, simply drag the components to the appropriate locations.

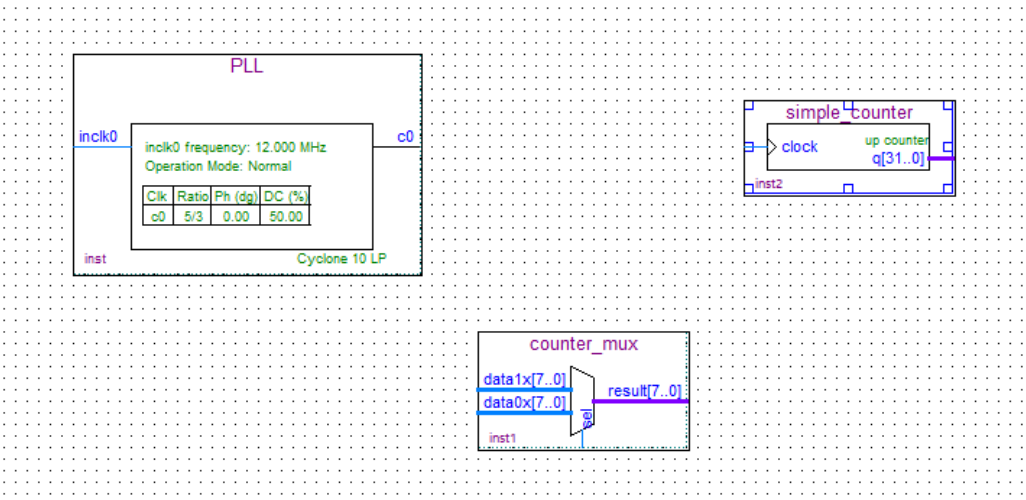

5.2.8 Connecting the Components

Next step is to make the proper connections between the three components we just added to the schematic.

5.2.8.1 Select the **"Node Tool"**.

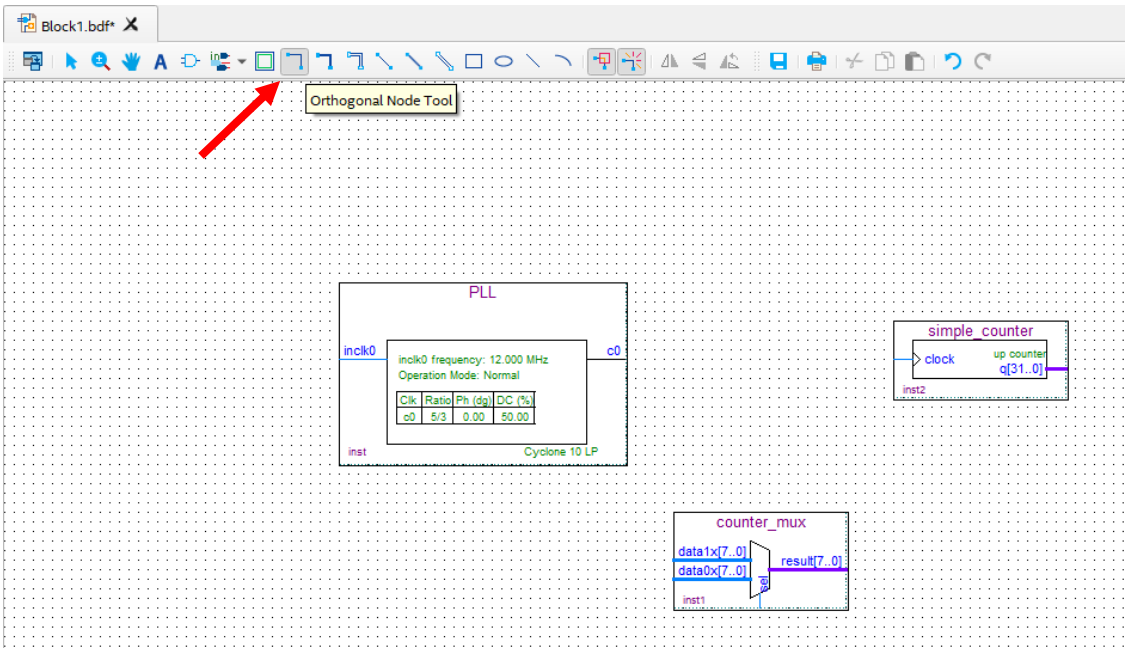

5.2.8.2 Connect the c0 of the PLL to the simple_counter as shown below:

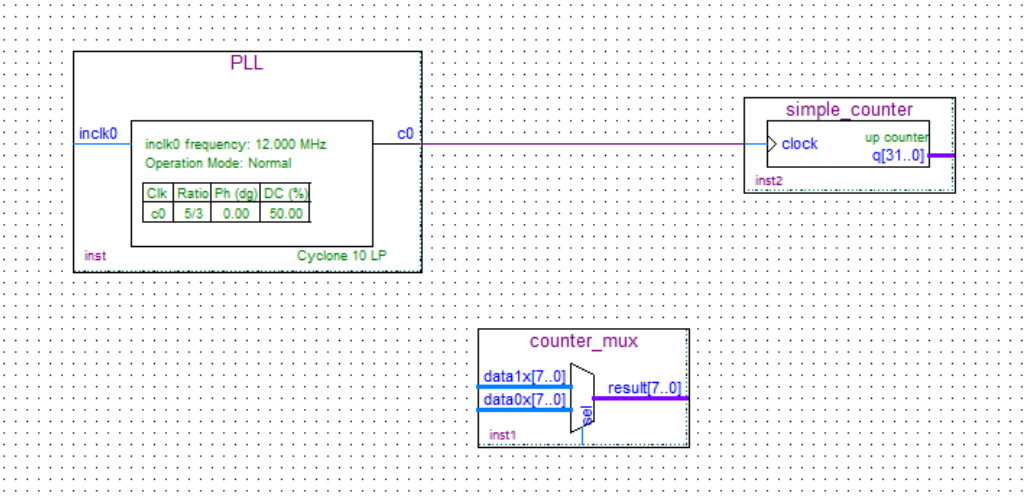

This will mean that a single signal (c0) is connected to the simple_counter (clock).

5.2.8.3 Select the **"Bus Tool"**.

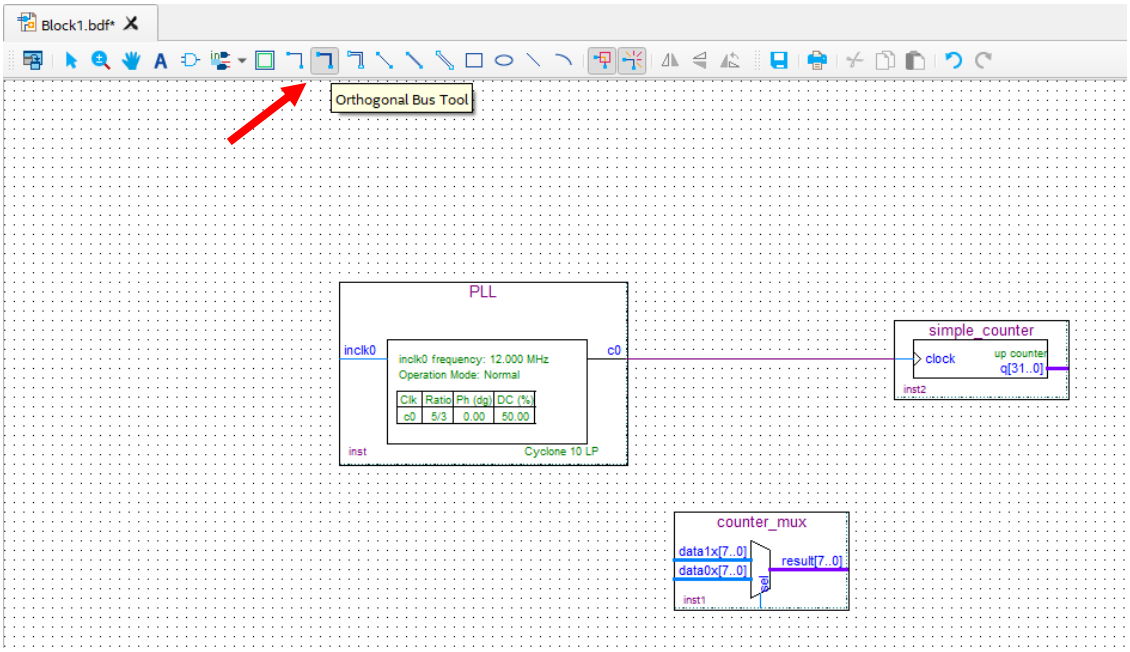

5.2.8.4 Using the bus tool create a connection coming out of the simple_counter and one connection for each of the inputs of the counter_mux as show below.

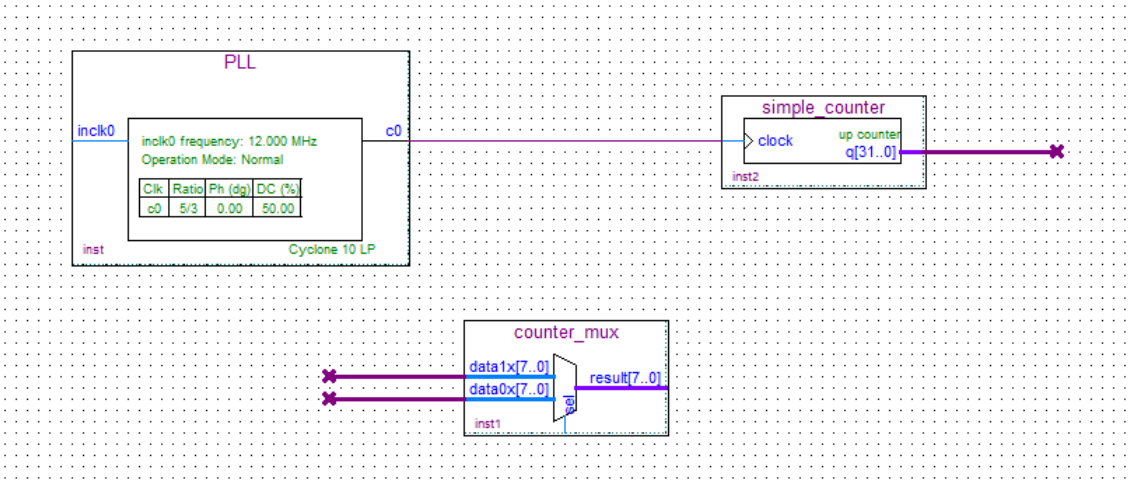

5.2.8.5 Right click on the output bus of the simple counter that you just created and select **"Properties"**.

Set the name of the bus to: **counter[31..0]**
The view of the "Bus Properties" should look like this:

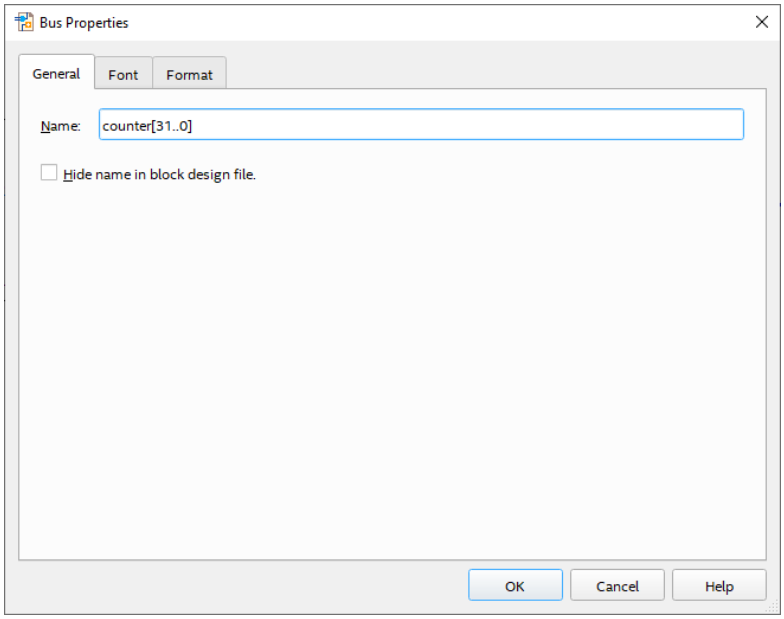

5.2.8.6 Click “OK”.

5.2.8.7 Do the same for input buses of the mux:

Name the top bus input: **data1x[7..0] → counter[24..31]**
Name the bottom bus input: **data0x[7..0] → counter[19..26]**

Schematic should look like this:

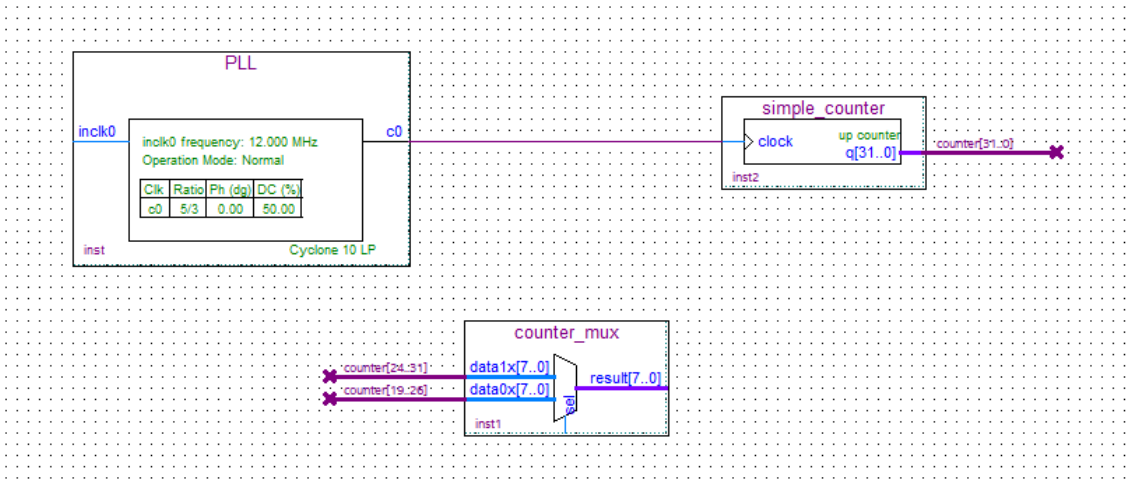

5.2.9 Add inputs, outputs to the schematic

5.2.9.1 Click on the **"Pin Tool"** as show below and select **"Input"**.

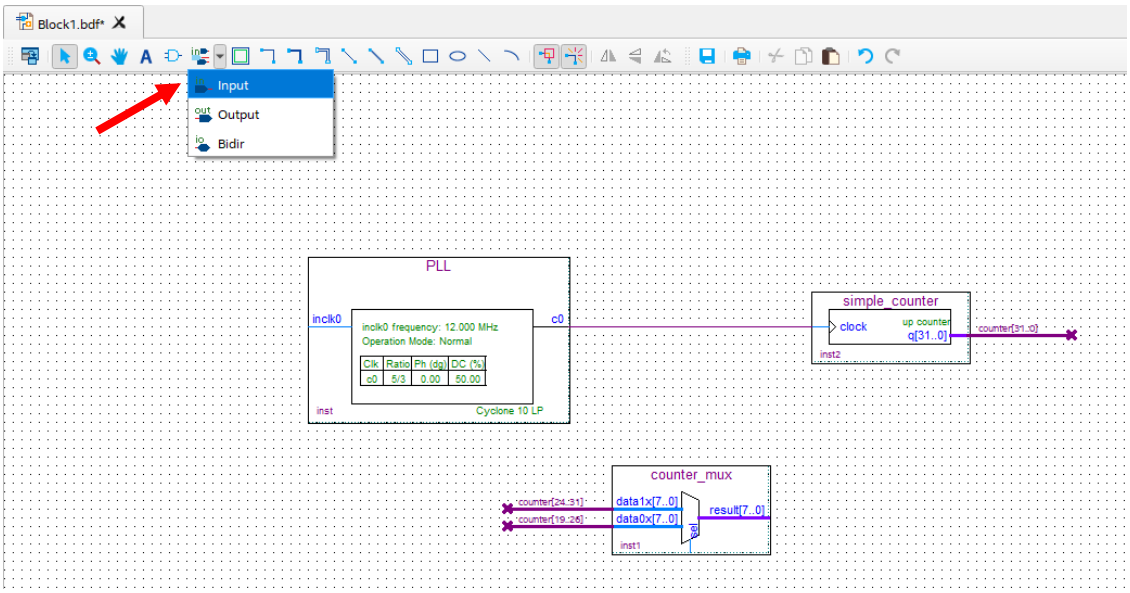

5.2.9.2 Add one input pin for inclk0 of the PLL and add other one input pin for sel of counter_mux.

Your schematic should look like this:

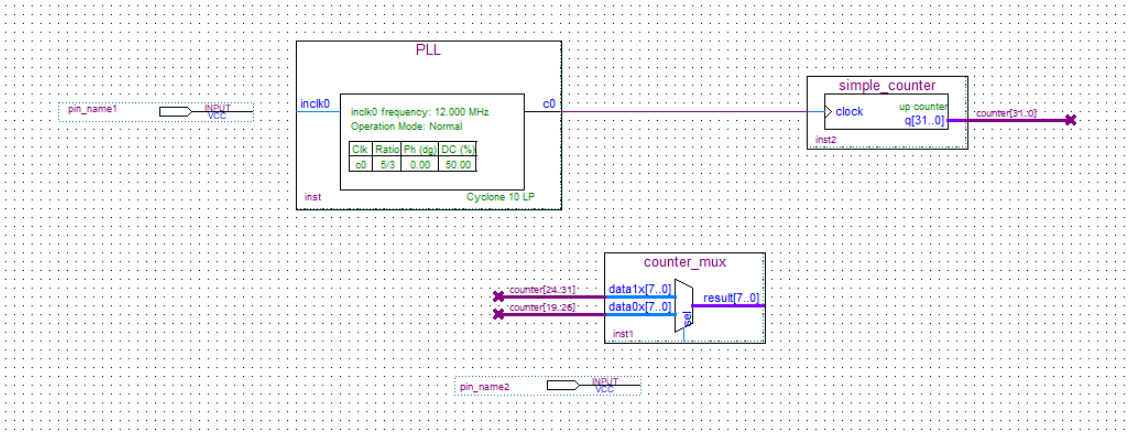

5.2.9.3 Rename the pin_name1 to **CLK12M** by double clicking its current name. This is going to be the clock signal coming into the FPGA.

5.2.9.4 Rename the pin_name2 to **USER_BTN** by double clicking its current name. This is going to be one of the user buttons of the C10LP RefKit board to select the mux.

5.2.9.5 Using the **"Node Tool"** connect:

CLK12M → **inclk0** (of the PLL component)

USER_BTN → **sel** (of the counter_mux component)

Your schematic should look like this now:

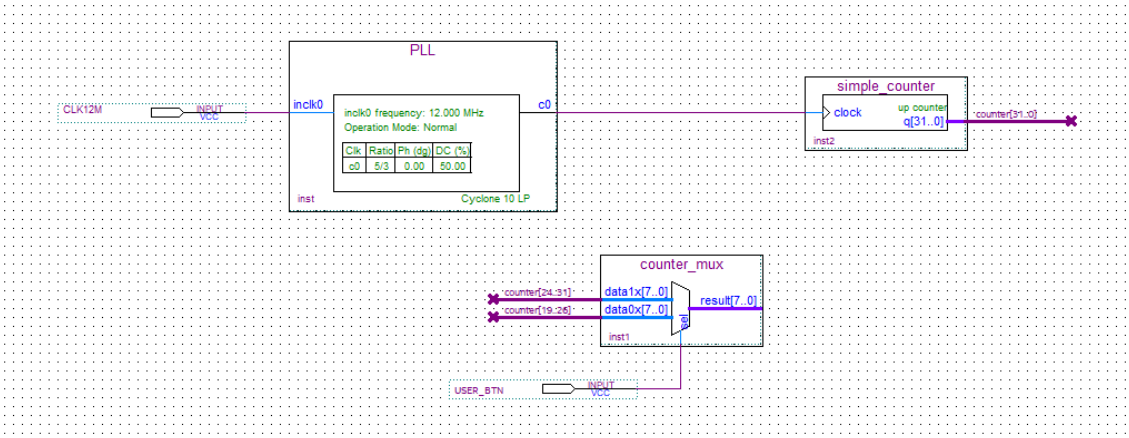

5.2.9.6 Click on the **"Pin Tool"** as before, but this time select **"Output"**.

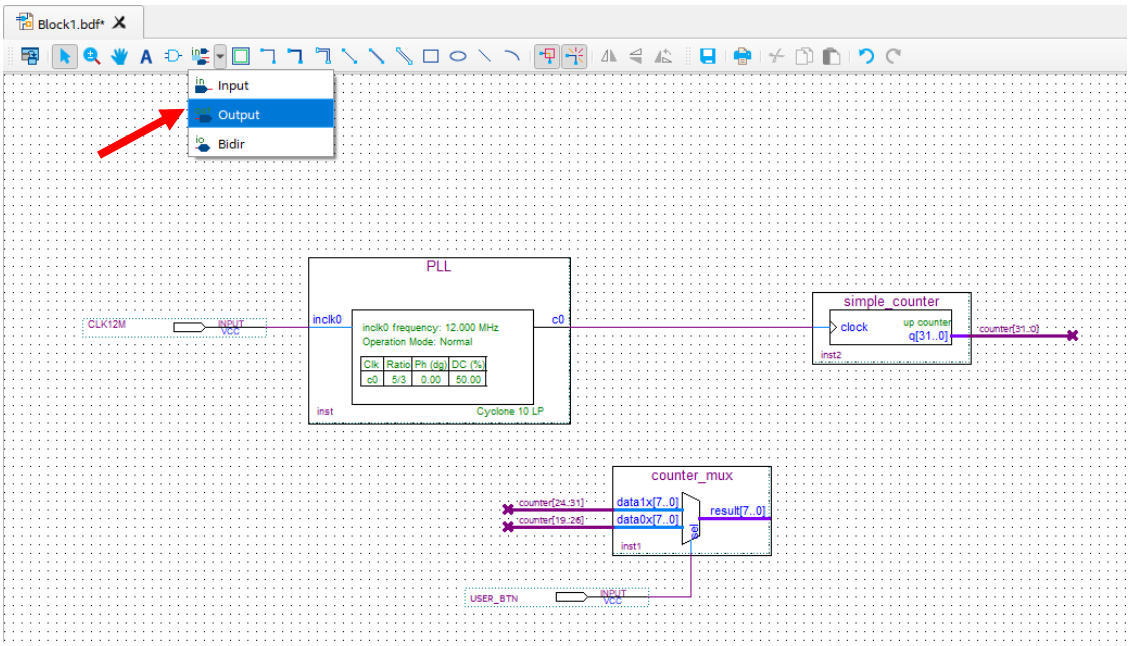

5.2.9.7 Add one output pin for the LEDs.

5.2.9.8 Rename the pin to **LED[7..0]**.

5.2.9.9 Using the **"Bus Tool"**, make the connection between counter_mux component and output pin:

result[7..0] → LED[7..0]

The final schematic should look like the following:

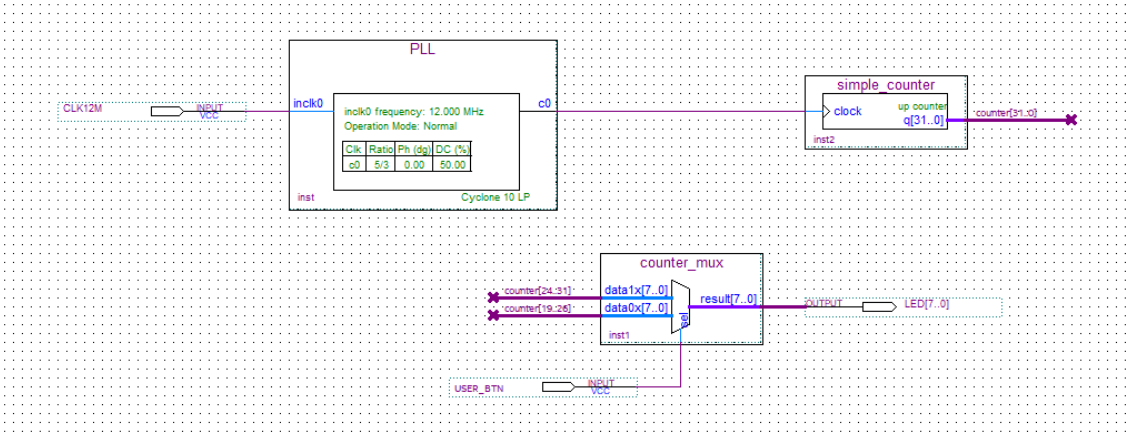

Looking at the schematic, even though the buses are not connected together by wires, the names of counter tell Quartus Prime to connect the signals together. Overall, the user button will toggle between displaying higher 8 bits of the counter and 8 lower bits of the counter. The signals of the counter that are not connected will not be used by Quartus Prime.

5.2.9.10 Save your design. Open the File Menu and select **"Save"**. Save it as **top.bdf**

5.2.10 Analysis and Synthesis

The next step is to run Analysis and Synthesis to ensure that there are no errors in the design. To run Analysis and synthesis open **Processing → Start → Analysis and Synthesis** or from clicking button on the top toolbar.

There should be no errors. If there are errors, they should be fixed before continuing and Analysis and Synthesis run again.

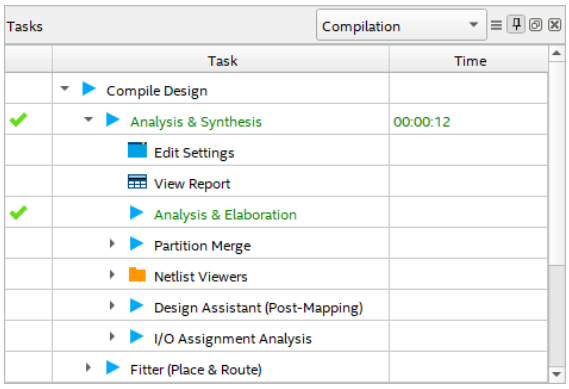

5.2.11 Adding Timing Constraints

Timing Constraints tell the Quartus what the timing requirements for this design are. Timing Constraints are required in every CPLD/FPGA design.

5.2.11.1 To add the timing constraints, select **File → New** and under the "Other File" section, select "Synopsys Design Constraints File" and select "OK".

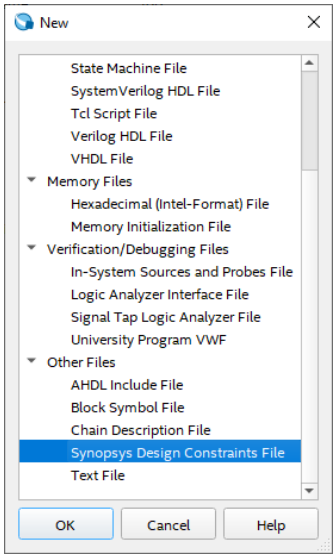

5.2.11.2 Type or copy the following lines into this new file:

```
#create input clock which is 12MHz
create_clock -name CLK12M -period 83.333 [get_ports {CLK12M}]
#derive PLL clocks
derive_pll_clocks
#derive clock uncertainty
derive_clock_uncertainty
#set false path
set_false_path -from [get_ports {USER_BTN}]
set_false_path -from * -to [get_ports {LED*}]
```

The first line "create_clock" tells Quartus Prime that the clock, CLK12M is 83.333 ns (12 MHz). It also assigns the CLK12M to a pin (port) in the .sdc format.
The second line "derive_pll_clocks" tells the software to look if there are any PLLs, and if so, automatically derive the clock multiplication/division of the outputs of the PLL even if they are used internally within the CPLD/FPGA.
The third line "derive_clock_uncertainty" tells the software to automatically determine the internal clock uncertainty. No clock is ideal, and thus there will be some internal jitter within the FPGA associated with it.
The fourth and fifth line "set_false_path" tells the software to not do any timing optimization to the stated paths/pins. The I/Os of this design are trivial, so they can be ignored in the Timing Analysis.

5.2.11.3 Use **File → Save** to save it as **top.sdc**.

5.2.11.4 Ensure that the file is added to the Project**: Assignments → Settings** and select "Timing Analyzer". The top.sdc should have been already added by default. If it is not, it will need to be added manually.

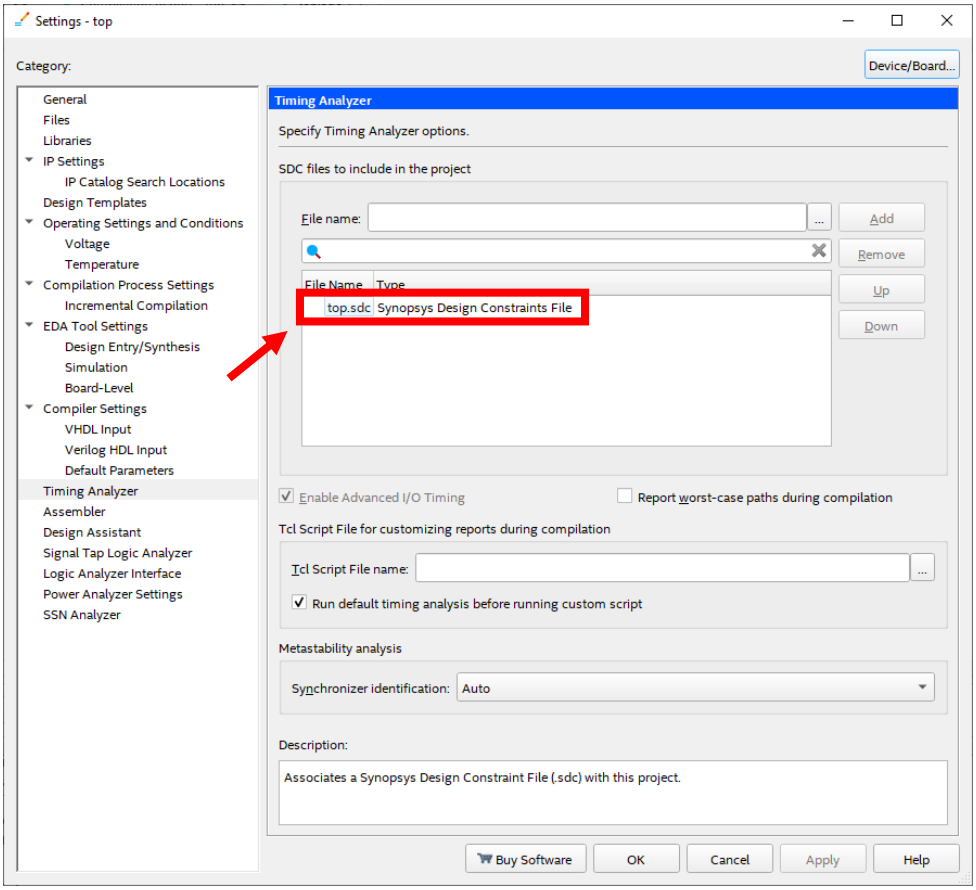

5.2.12 Pinning Assignments

Before the design can be downloaded to the FPGA, pin assignments that match the hardware on the board are needed. There are different ways to do this such as the Pin Planner, Assignment Editor, and text files.

The following steps will show one of these ways, the Pin Planner. Since there are only 10 pins that need to be assigned, the Pin Planner can be used. If many pins are needed, other ways can be used such as the Quartus Assignment Editor, or by importing constraints from a text file or spreadsheet.

5.2.12.1 Open the Pin Planner: **Assignments → Pin Planner**.

A new window will open as seen below:

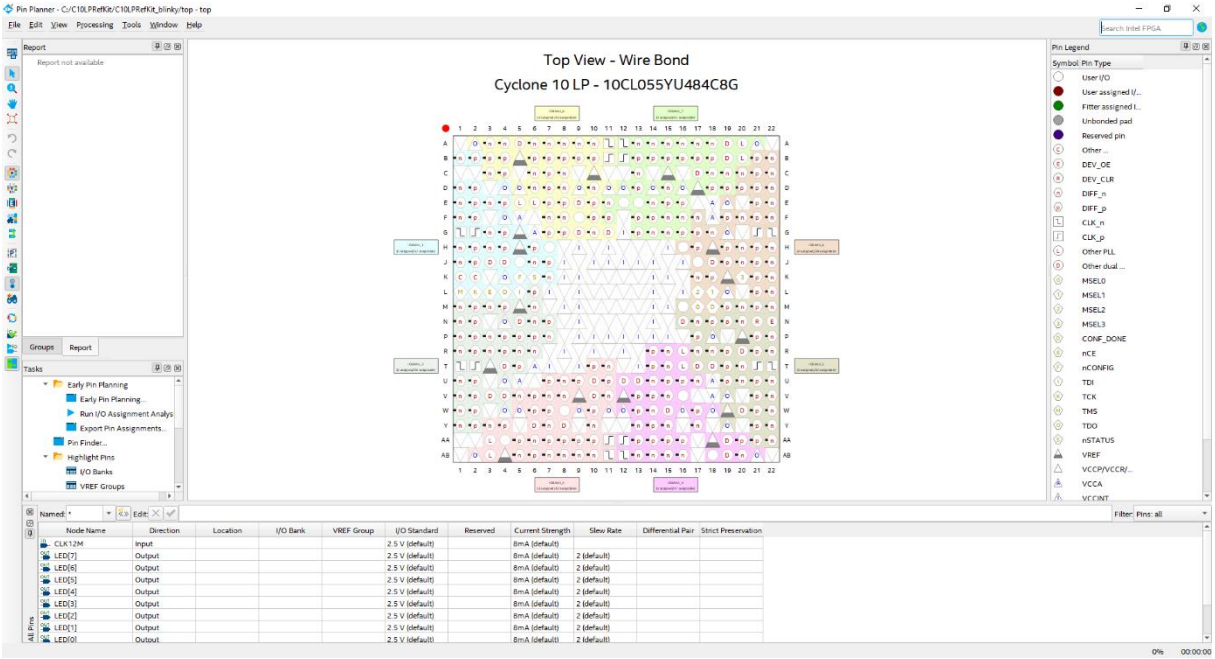

5.2.12.2 To make pin assignments, select the CLK12M (node name) on the bottom portion and drag and drop it to pin G21 of the Top View of the FPGA or alternatively set the Location field of the CLK12M to **PIN_G21**.

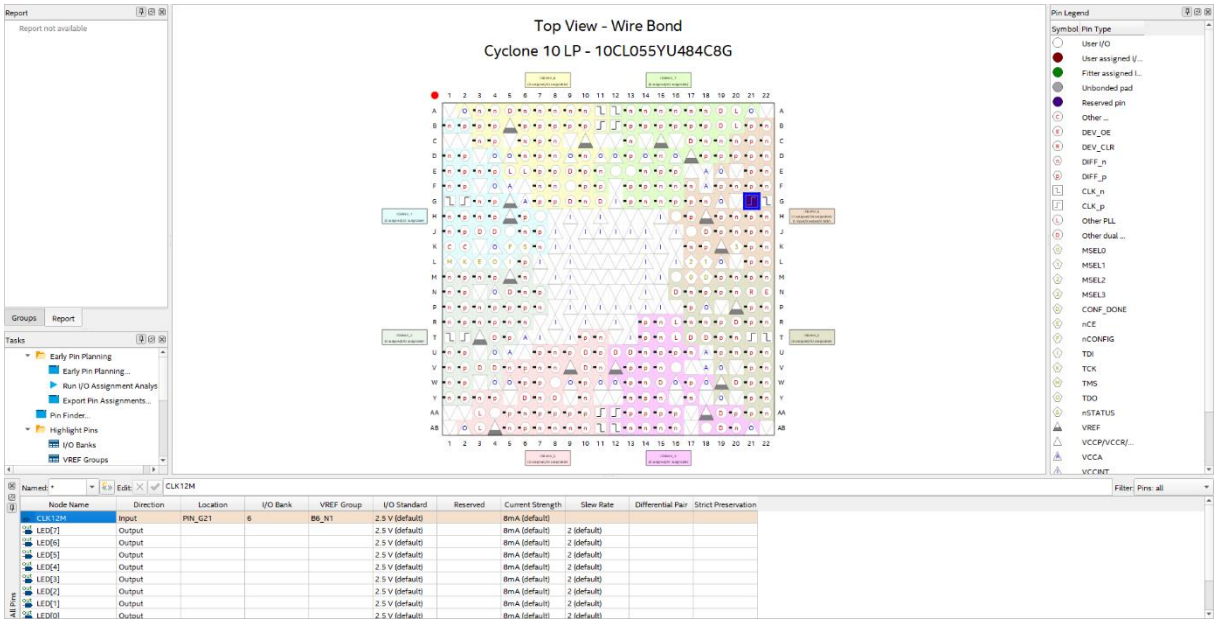

Note that the Location of the CLK12M is now set to Location PIN_G21 (as seen in blue colour in the top view of the FPGA).

5.2.12.3 The other pins need to be assigned as well. Just like previously set all the pins to their appropriate locations using the table below, by either drag and drop or writing manually the location.

Node Name	Pin Location
LED[7]	PIN_U7
LED[6]	PIN_U8
LED[5]	PIN_U9
LED[4]	PIN_W10
LED[3]	PIN_Y10
LED[2]	PIN_AA9
LED[1]	PIN_AA10
LED[0]	PIN_AB10
USER_BTN	PIN_T11

On the board we have multiple user buttons, in this case, we will use S1, which is the central of joystick buttons.

5.2.12.4 Now the Pin Planner should look like this after assigning all the pin locations.

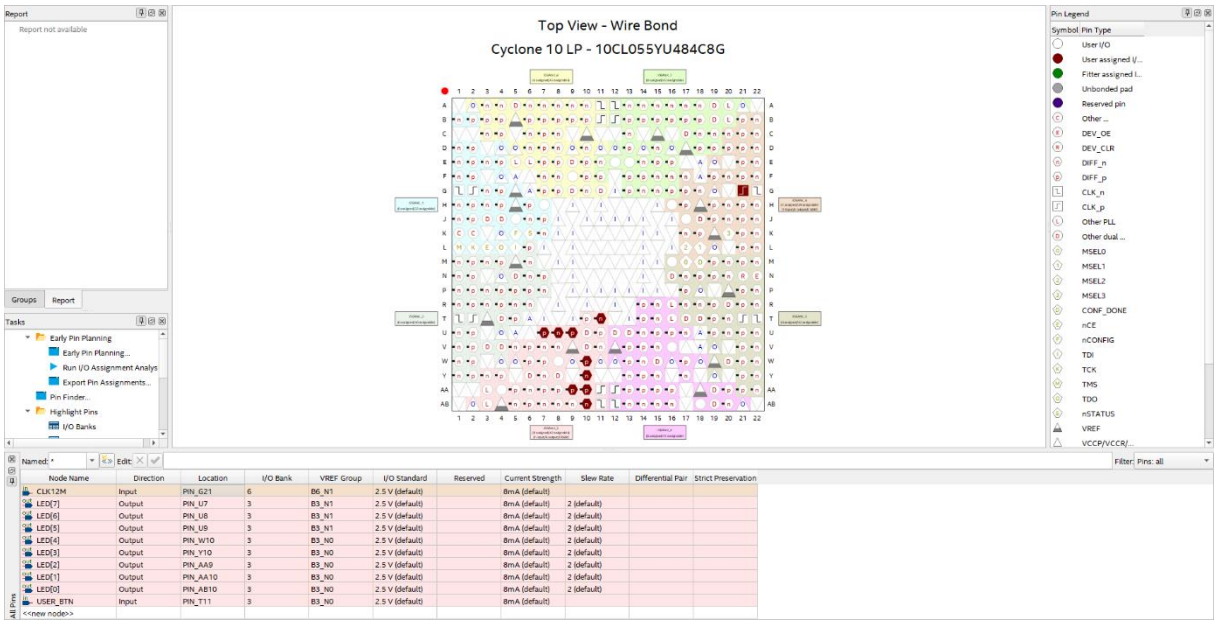

5.2.12.5 The specific pins are now selected, but the I/O standards now need to be set as well. The button, LEDS, and clock pins are the same I/O standard for C10LP RefKit since all banks and peripherals are powered by 3.3V. The USER_BTN, the LEDs and clock pins are 3.3-V LVTTL. These I/O standards can be set in the Pin Planner, by selecting the I/O Standard. Select the I/O standard either from the “All Pins” tab or the “Groups” tab and change the 2.5V (default) to the specific I/O standard.

The Pin Planner should now look like this:

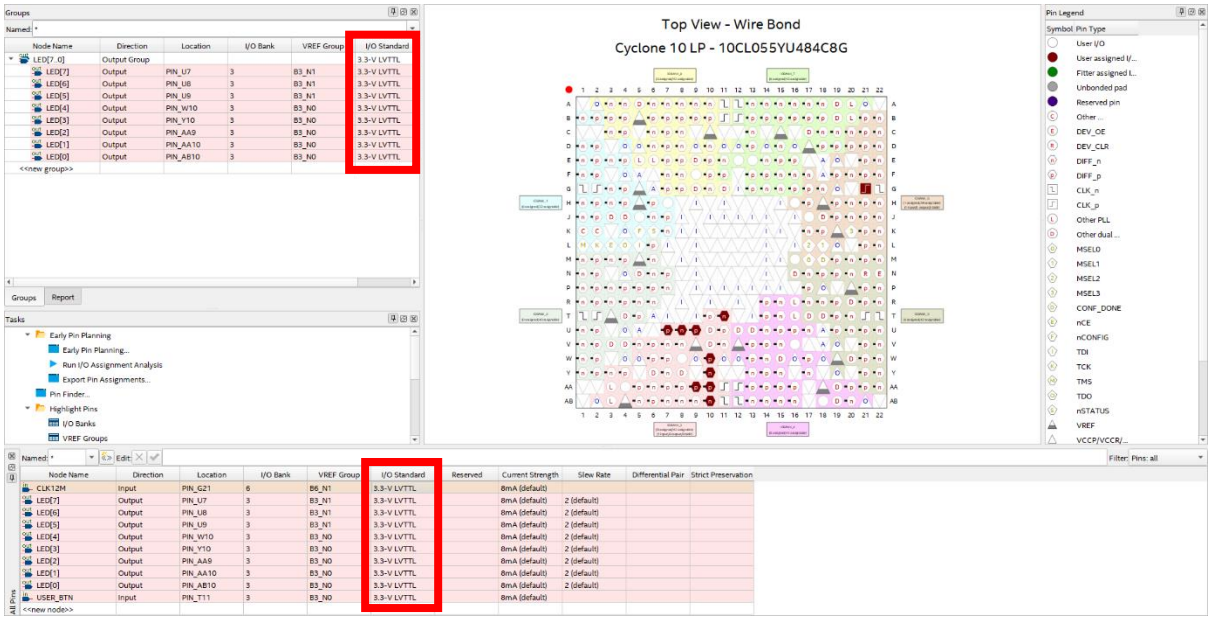

5.2.12.6 Close the Pin Planner. The settings are automatically saved.

5.2.13 Compiling the Design

5.2.13.1 You can set the default I/O Standard which can eliminate some design warning and save you time from setting the standard for some pins manually.

Open **Assignments → Device → Device and Pin Options → Voltage** and set Default I/O Standard to **"3.3-V LVTTL"** and press "OK" to all the windows.

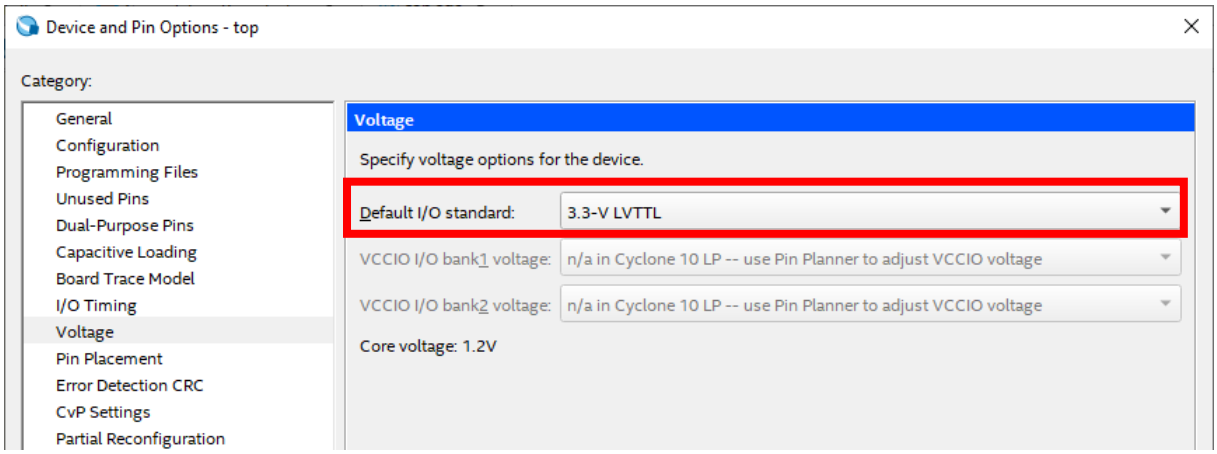

The next step is to compile and complete the design. This step will verify that there are no errors, create internal databases, and create programming files that will be used in the next steps.

5.2.13.2 To compile the design, select **Processing → Start Compilation** or push the button on the toolbar.

If there are errors, they will need to be resolved and re-compiled before the design can be programmed to the board. When Compiling finishes and there are no errors, there will be a message at the bottom of the window that states: Full Compilation was successful and a 100% indication along with the compile time in the right bottom corner.

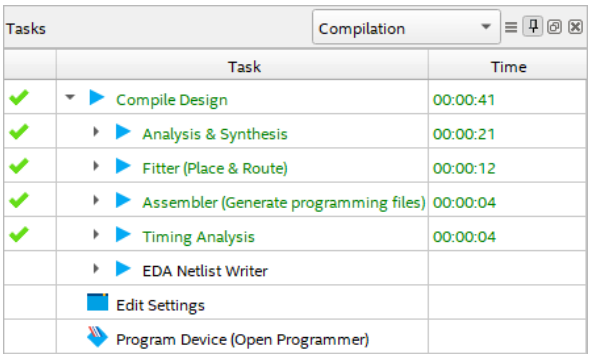

5.2.14 Reading the Compilation Report

After successfully compiling the design, a Compilation Report should appear as shown above:

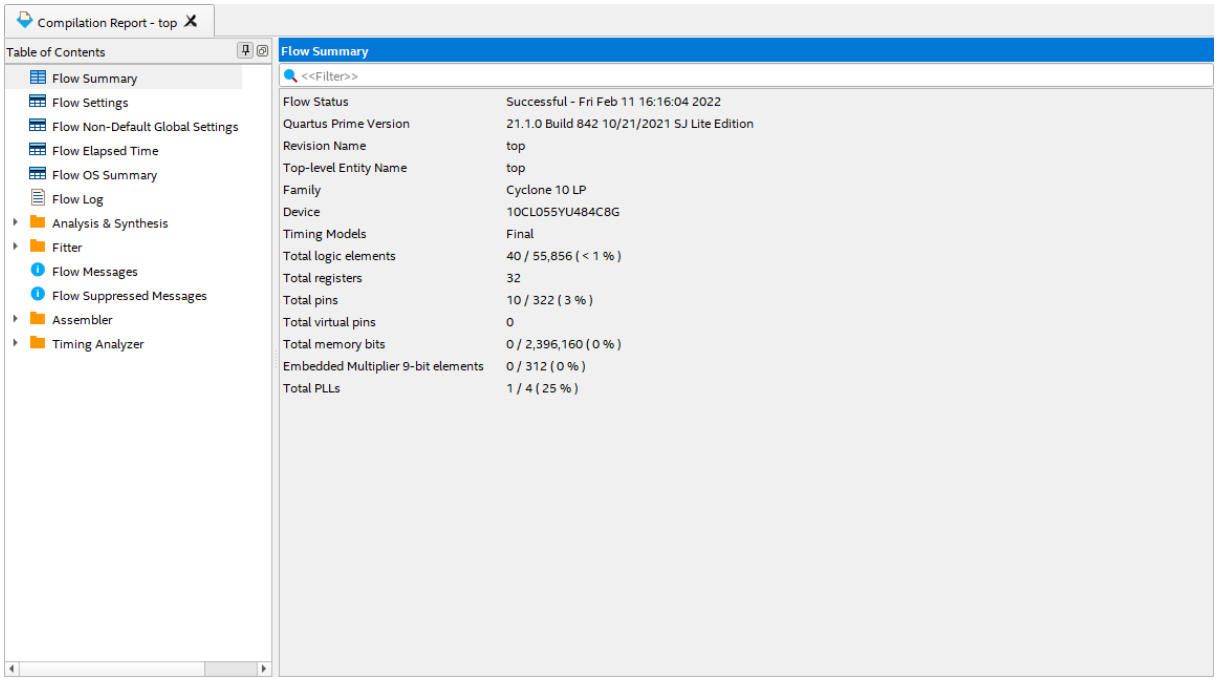

This report is very useful with a lot of information about the design. Last message state that the design was fully constrained, Timing Analysis and compilation successful, but there is more to it:

- In the Flow Summary, it can be seen how many logic elements the whole design took, along with total PLLs, registers, pins, etc.

- In Analysis and Synthesis, more detailed information about the resources used can be seen in Resource Usage Summary, as well how many LEs were used for each component in Resource Utilization by Entity.

- In the Fitter, more detailed information about the pins and their banks can be seen.

- Timing Analyzer shows various timing information concerning the design, as well as if the design has met the timing requirements. In this case timing requirements were met, but in other cases that requirements might not be met, could be solved by going over the information provided in the reports inside this folder. Most notable reports in this folder are the maximum frequency the design can achieve, setup and hold slack, unconstrained paths in case they were missed, etc.

Chapter 6 - Configuring the Cyclone 10 LP RefKit

After successfully compiling your project, there should new files be generated. In case of Cyclone 10 LP devices, only the .sof file is generated automatically.

6.1 Configure the FPGA in JTAG mode

6.1.1 Connect your C10LP RefKit board to a power supply and then to your PC using an USB cable. Since the Arrow USB Blaster should be already installed, the Window's Device Manager should display the following entries are highlighted in red (port number may differ depending on your PC). If the Arrow USB Blaster is not installed, please refer to Chapter 4.2 for installing the drivers.

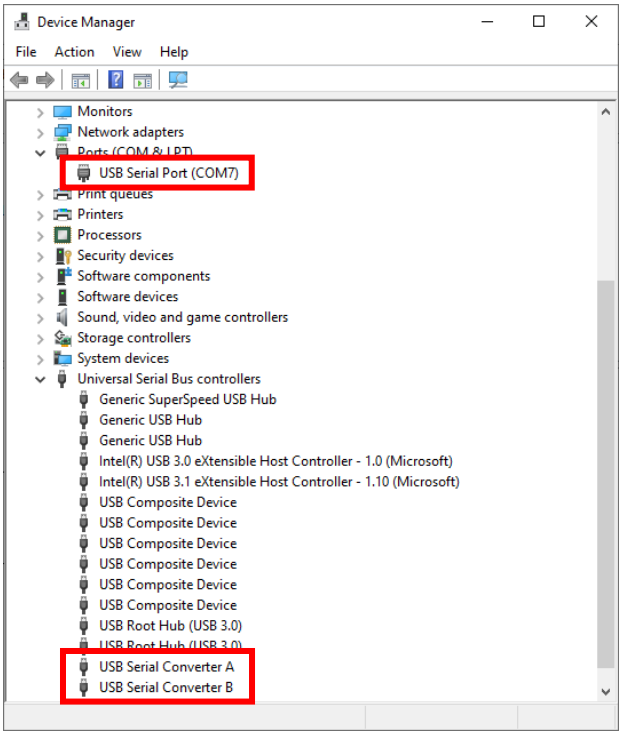

6.1.2 Open the Quartus Prime Programmer from **Tools → Programmer** or double-click on Program Device (Open Programmer) from the Tasks pane.

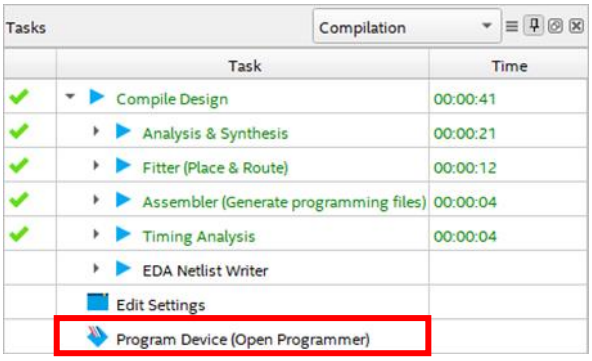

6.1.3 The programmer should add the programming file automatically. After opening the program this should be the view of the new window:

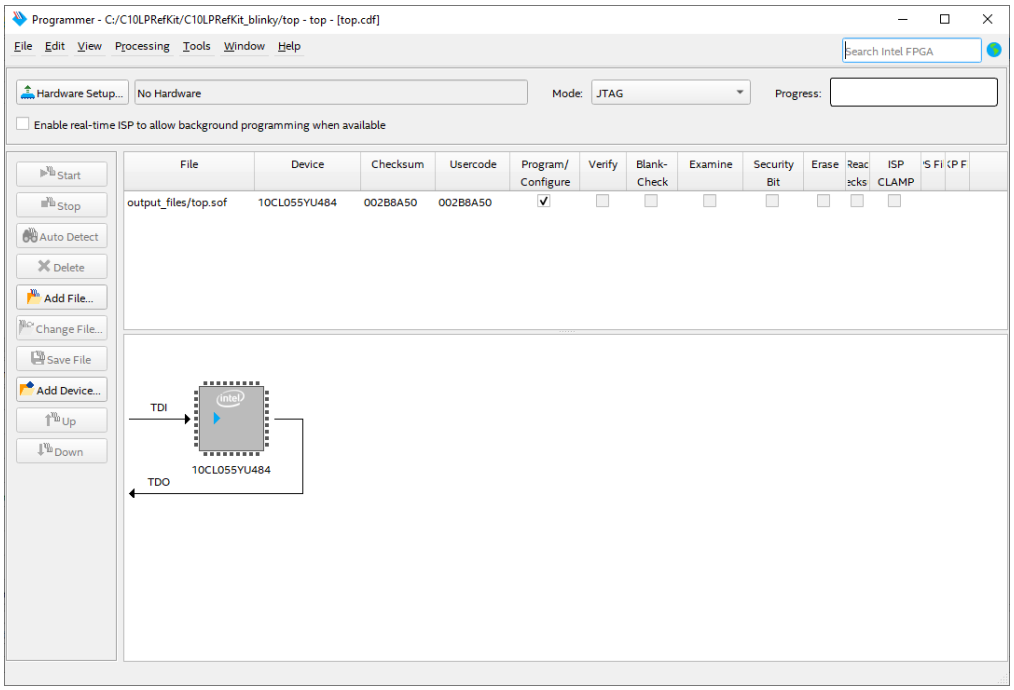

6.1.4 Click **Hardware Setup…** and double click **Arrow-USB-Blaster** entry in the Hardware Setup tab. The Currently selected hardware should now show Arrow-USB-Blaster [USB0] (depending on your PC, the USB port number may variant).

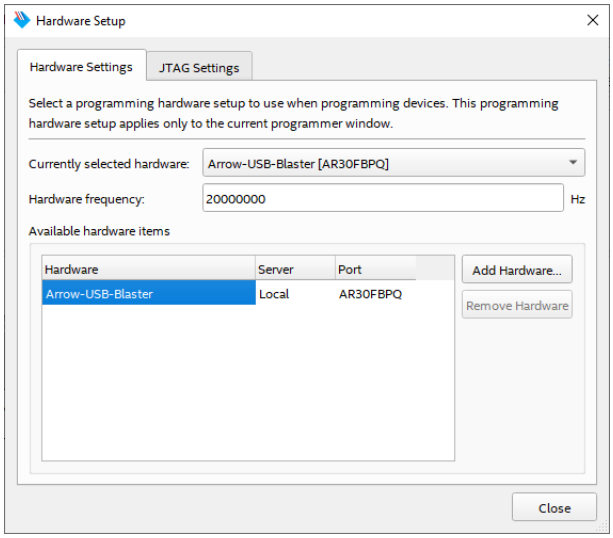

6.1.5 Click “Close”.

6.1.6 Make sure the hardware setup is Arrow-USB-Blaster [USB0] and the mode is JTAG. If the Mode is not set to JTAG, click on it, and select JTAG from the drop-down menu.

6.1.7 If the configuration has been added by default, you can skip the following steps and continue with the 6.1.12 point.

6.1.8 Click “Auto Detect” on the left side of the Programmer.

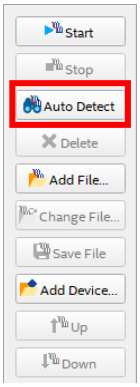

6.1.9 Select **10CL055Y** device and click “OK” on the Select Device window.

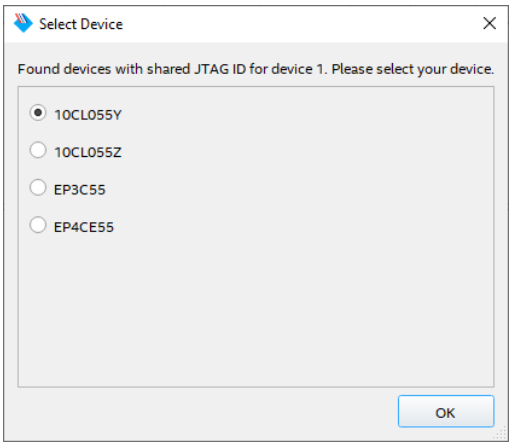

6.1.10 Double click <none> to choose programming file.

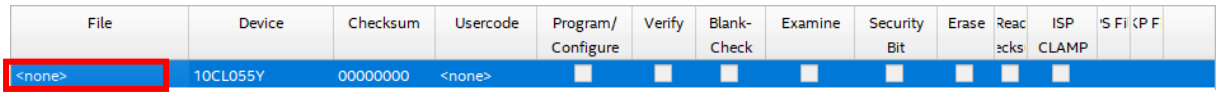

6.1.11 Navigate to **<project_directory>/output_files/** in your compilation directory. Select and open the **top.sof** file.

6.1.12 Make sure the Programmer shows the correct file and correct part in the JTAG chain and check the Program/Configure checkbox.

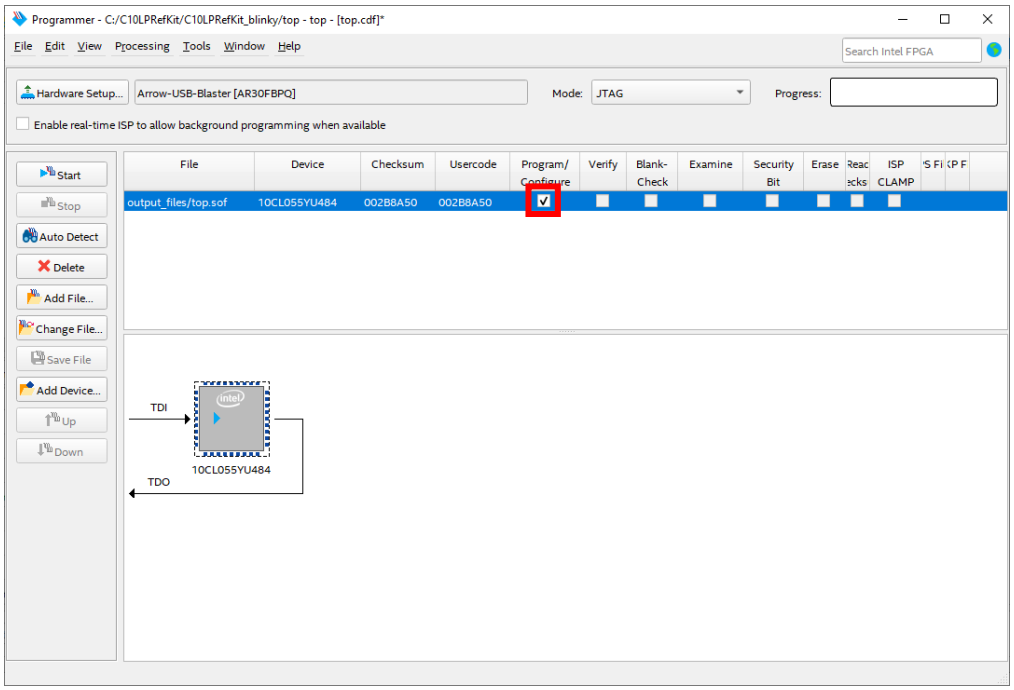

6.1.13 Click Start to program the C10LP RefKit. When the configuration is complete, the Progress bar should reach 100% (Successful).

The design is now programmed to the FPGA.

Note that turning off and then on the FPGA will result into losing its configuration.

6.2 Serial configuration flash memory programming

The configuration data to be written to EPCQ-A will be part of the JTAG indirect configuration file (.jic). This configuration data is automatically loaded from the serial configuration flash into the Cyclone 10 LP device when the board is powered up.

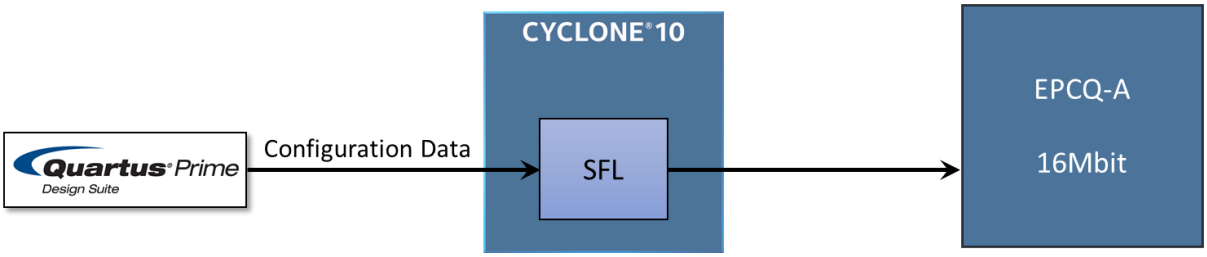

6.2.1 Programming File generation

6.2.1.1 In Quartus Prime, go to **File → Convert Programming Files...**

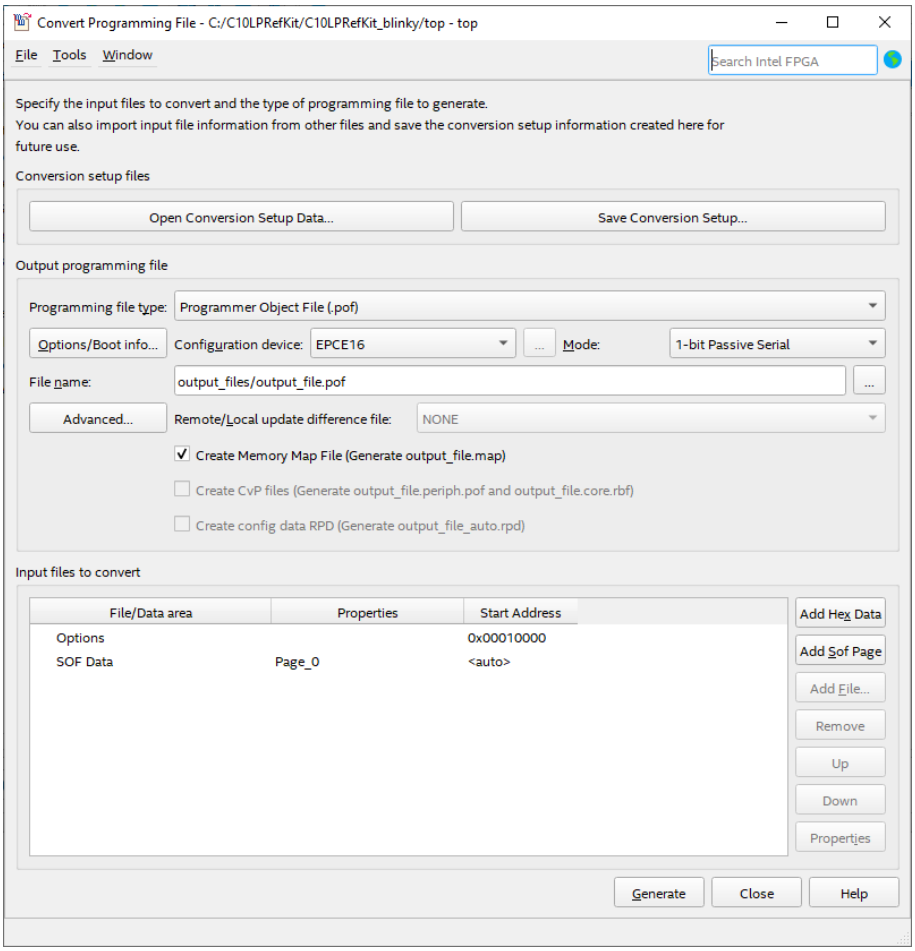

6.2.1.2 Set the programming file type to **JTAG Indirect Configuration File (.jic)**.

6.2.1.3 Click on the button for configuration device.

6.2.1.4 Select Cyclone 10 LP for the Device family, choose **EPCQ16A** from the Configuration device tab, and make sure that the **Active Serial** is set to mode.

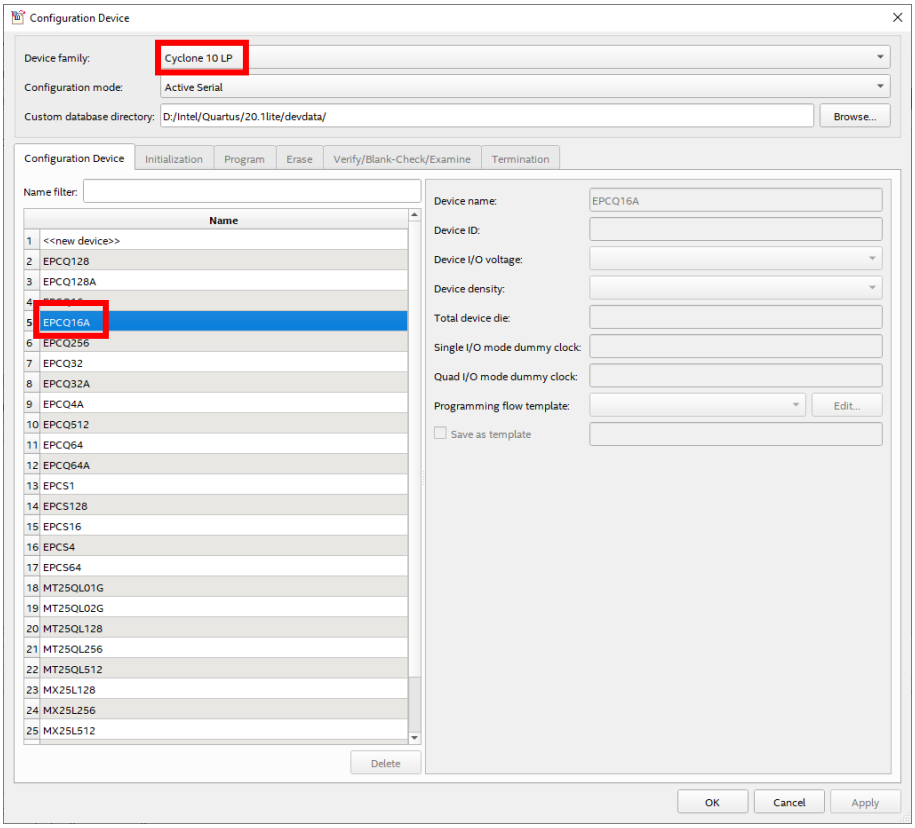

6.2.1.5 Click OK. Now the output programming file settings should look like this:

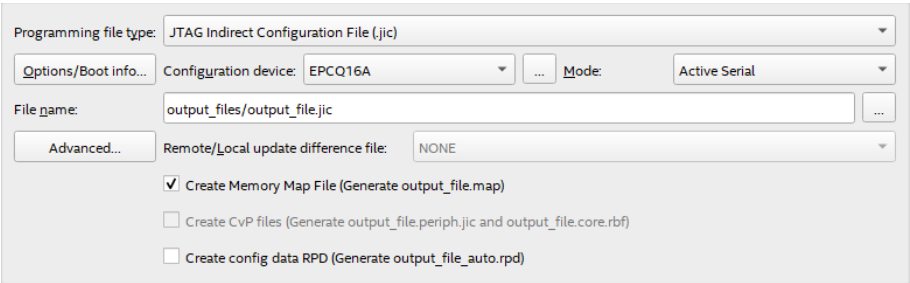

6.2.1.6 Select **Flash Loader** under Input files to covert settings and click on **Add Device…** button.

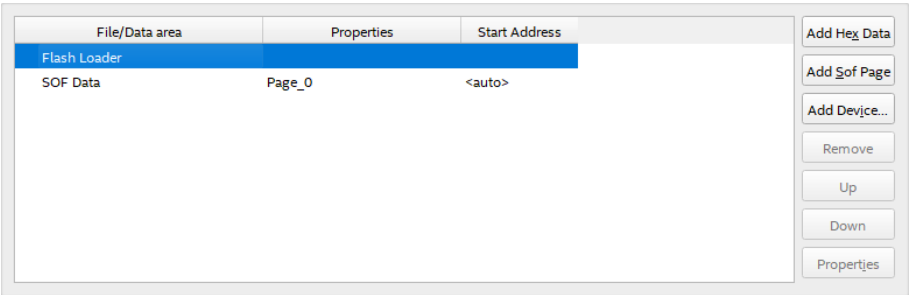

6.2.1.7 On the new window select **Cyclone 10 LP** as Device family and **10CL055Y** as Device name.

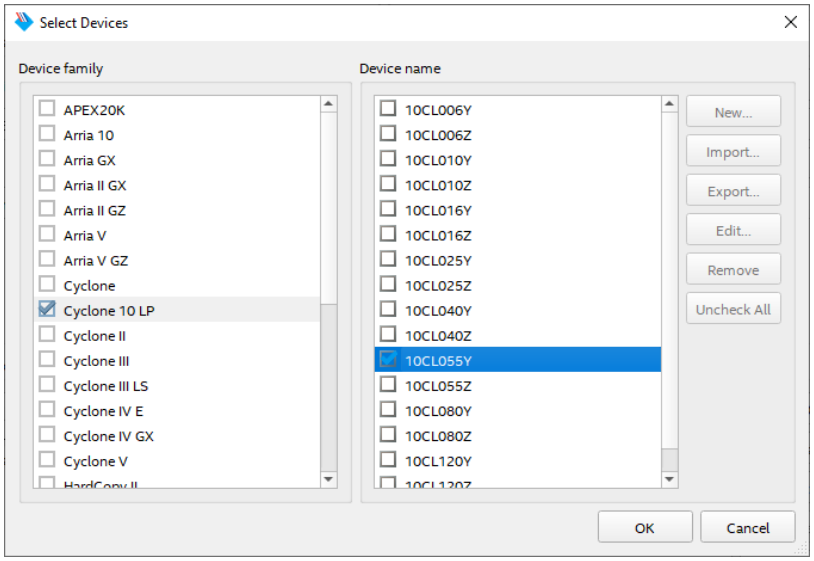

6.2.1.8 Click **OK** to add device to Flash Loader.

6.2.1.9 Select **SOF Data** under Input files to convert and click on **Add File…** button.

6.2.1.10 Go to **<project_directory>/output_files/** and open **top.sof**.

6.2.1.11 Make sure that your settings are same as the picture below and if everything is correct.

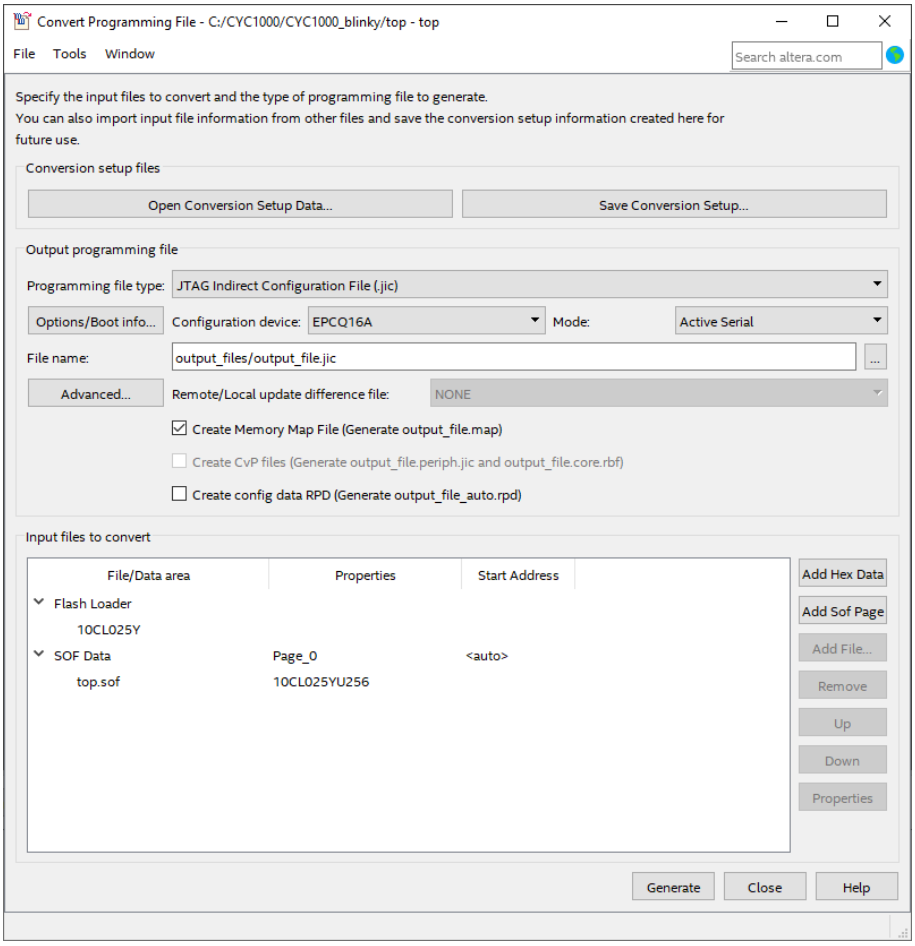

6.2.1.12 Click **Generate**.

6.2.1.13 Click **OK** on the successful file generation notification and **close** Convert Programming File window.

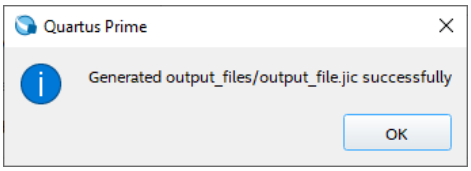

6.2.2 Device Programming

6.2.2.1 Open Programmer.

6.2.2.2 Select **output_files/top.sof** and click **Change File…** button.

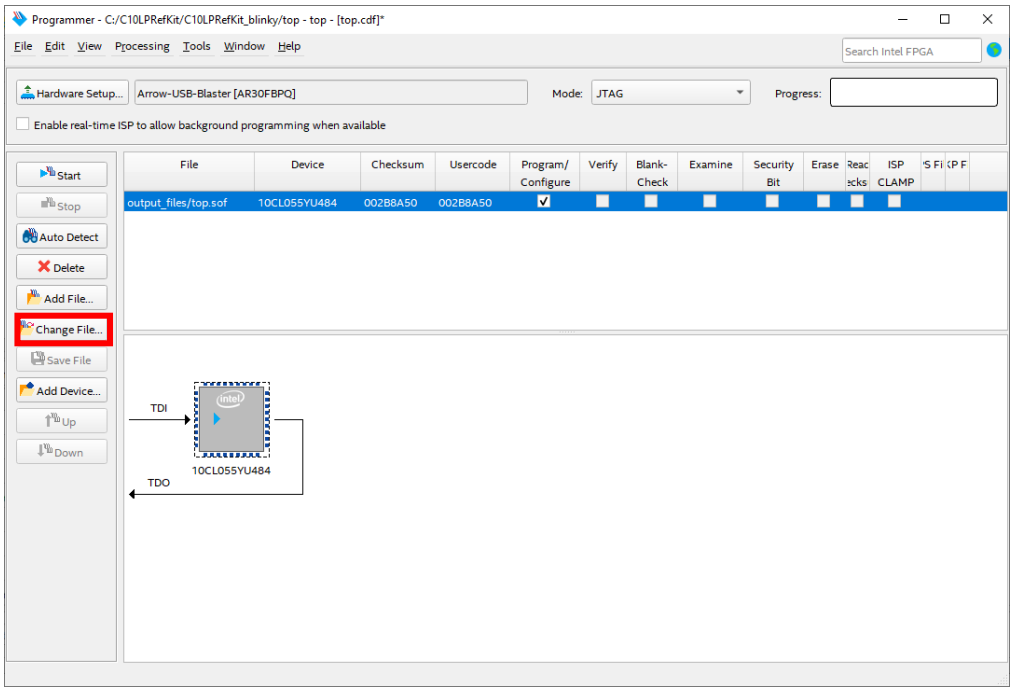

6.2.2.3 Go to **<project_directory>/output_files/** and open **output_file.jic**.
When you add the .jic file, the Programmer will automatically update the JTAG chain and put EPCQ-A flash memory.

6.2.2.4 Make sure the Programmer shows the correct file and correct parts in the JTAG chain and check the Program/Configure checkbox.

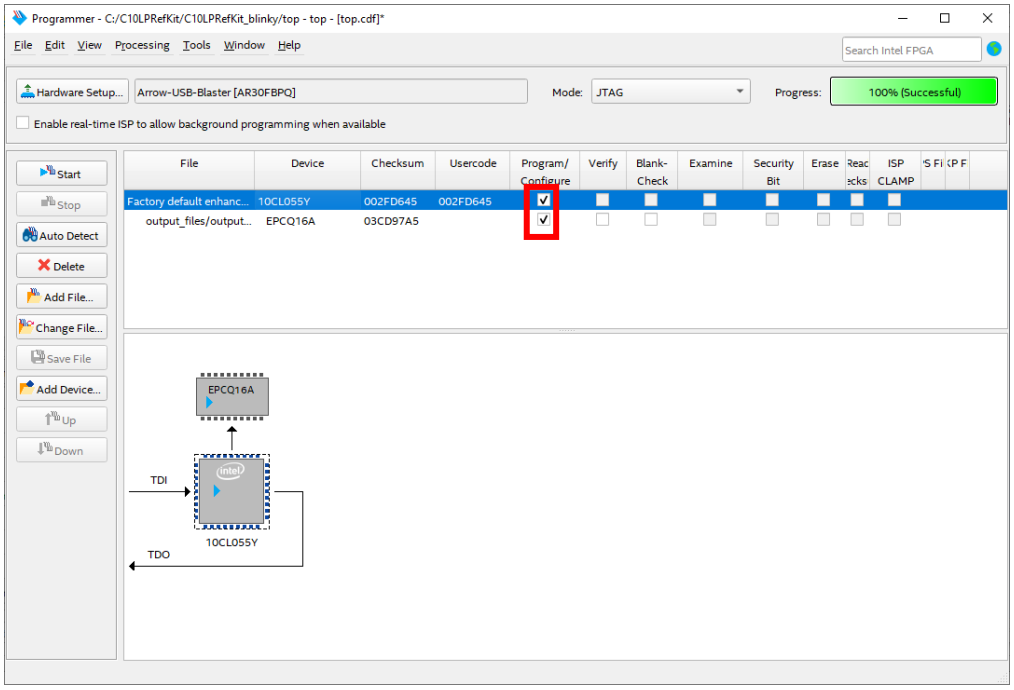

6.2.2.5 Click **Start** to configure EPCQ-A. The programming could take a while.

6.2.2.6 When the programming is finished, the C10LP RefKit should be able to keep its configuration data even after powered off.

At this point our program is stored in the EPCQ-A flash memory, but the Cyclone 10 LP current configuration is the Serial Flash Loader which is responsible for programming configuration flash memory. We can simply reconfigure the FPGA with our program by pushing RESET button which will reset the FPGA and automatically loads the configuration from EPCQ-A.

6.3 Testing the Design

Does not matter which way the C10LP RefKit was configured, the results should be the same for both methods, with the only difference being if configuration is retained after power off.

On the board by default, the LEDS should now toggle in a slow counting sequence.

Push and hold the S1 USER_BTN (central joystick button) to see that the LEDs will now toggle in a very fast counting sequence. USER_BTN is on the side of the LEDs.

Releasing the USER_BTN, will make the LEDs toggle at a slower rate as before.

Chapter 7 - Common Issues and Fixes

1) **Issue:** In some rare cases when using Windows 10 operating system, the programmer DLL is not properly loaded/unloaded, causing the Quartus Programmer to not detect the Arrow USB Programmer2.

Solution: Restart the Altera JTAG Server using the Services application of Windows.

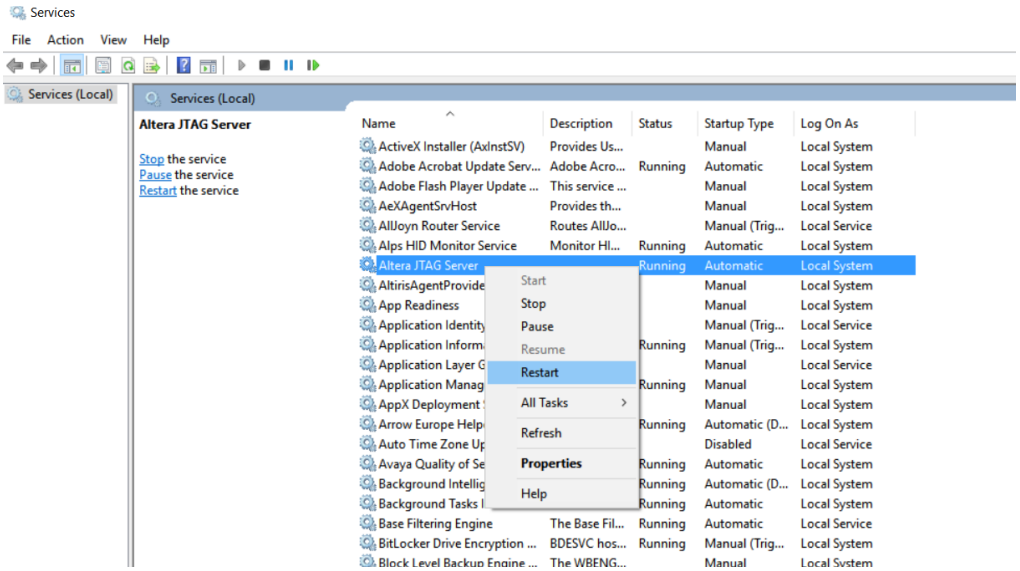

Chapter 8 - Appendix

8.1 Revision History

Version	Change Log	Date of Change
V1.0	Initial Version	17/02/2022

8.2 Legal Disclaimer

ARROW ELECTRONICS

EVALUATION BOARD LICENSE AGREEMENT

By using this evaluation board or kit (together with all related software, firmware, components, and documentation provided by Arrow, "Evaluation Board"), You ("You") are agreeing to be bound by the terms and conditions of this Evaluation Board License Agreement ("Agreement"). Do not use the Evaluation Board until You have read and agreed to this Agreement. Your use of the Evaluation Board constitutes Your acceptance of this Agreement.

PURPOSE

The purpose of this evaluation board is solely intended for evaluation purposes. Any use of the Board beyond these purposes is on your own risk. Furthermore, according the applicable law, the offering Arrow entity explicitly does not warrant, guarantee or provide any remedies to you with regard to the board.

LICENSE

Arrow grants You a non-exclusive, limited right to use the enclosed Evaluation Board offering limited features only for Your evaluation and testing purposes in a research and development setting. Usage in a live environment is prohibited. The Evaluation Board shall not be, in any case, directly or indirectly assembled as a part in any production of Yours as it is solely developed to serve evaluation purposes and has no direct function and is not a finished product.

EVALUATION BOARD STATUS

The Evaluation Board offers limited features allowing You only to evaluate and test purposes. The Evaluation Board is not intended for consumer or household use. You are not authorized to use the Evaluation Board in any production system, and it may not be offered for sale or lease, or sold, leased or otherwise distributed for commercial purposes.

OWNERSHIP AND COPYRIGHT

Title to the Evaluation Board remains with Arrow and/or its licensors. This Agreement does not involve any transfer of intellectual property rights ("IPR) for evaluation board. You may not remove any copyright or other proprietary rights notices without prior written authorization from Arrow or it licensors.

RESTRICTIONS AND WARNINGS

Before You handle or use the Evaluation Board, You shall comply with all such warnings and other instructions and employ reasonable safety precautions in using the Evaluation Board. Failure to do so may result in death, personal injury, or property damage.

You shall not use the Evaluation Board in any safety critical or functional safety testing, including but not limited to testing of life supporting, military or nuclear applications. Arrow expressly disclaims any responsibility for such usage which shall be made at Your sole risk.

WARRANTY

Arrow warrants that it has the right to provide the evaluation board to you. This warranty is provided by Arrow in lieu of all other warranties, written or oral, statutory, express or implied, including any warranty as to merchantability, non-infringement, fitness for any particular purpose, or uninterrupted or error-free operation, all of which are expressly disclaimed. The evaluation board is provided "as is" without any other rights or warranties, directly or indirectly.

You warrant to Arrow that the evaluation board is used only by electronics experts who understand the dangers of handling and using such items, you assume all responsibility and liability for any improper or unsafe handling or use of the evaluation board by you, your employees, affiliates, contractors, and designees.

LIMITATION OF LIABILITIES

In no event shall Arrow be liable to you, whether in contract, tort (including negligence), strict liability, or any other legal theory, for any direct, indirect, special, consequential, incidental, punitive, or exemplary damages with respect to any matters relating to this agreement. In no event shall arrow's liability arising out of this agreement in the aggregate exceed the amount paid by you under this agreement for the purchase of the evaluation board.

IDENTIFICATION

You shall, at Your expense, defend Arrow and its Affiliates and Licensors against a claim or action brought by a third party for infringement or misappropriation of any patent, copyright, trade secret or other intellectual property right of a third party to the extent resulting from (1) Your combination of the Evaluation Board with any other component, system, software, or firmware, (2) Your modification of the Evaluation Board, or (3) Your use of the Evaluation Board in a manner not permitted under this Agreement. You shall indemnify Arrow and its Affiliates and Licensors against and pay any resulting costs and damages finally awarded against Arrow and its Affiliates and Licensors or agreed to in any settlement, provided that You have sole control of the defense and settlement of the claim or action, and Arrow cooperates in the defense and furnishes all related evidence under its control at Your expense. Arrow will be entitled to participate in the defense of such claim or action and to employ counsel at its own expense.

RECYCLING

The Evaluation Board is not to be disposed as an urban waste. At the end of its life cycle, differentiated waste collection must be followed, as stated in the directive 2002/96/EC. In all the countries belonging to the European Union (EU Dir. 2002/96/EC) and those following differentiated recycling, the Evaluation Board is subject to differentiated recycling at the end of its life cycle, therefore: It is forbidden to dispose the Evaluation Board as an undifferentiated waste or with other domestic wastes. Consult the local authorities for more information on the proper disposal channels. An incorrect Evaluation Board disposal may cause damage to the environment and is punishable by the law.